SECTION TM
TRANSAXLE & TRANSMISSION

CONTENTS

CVT: RE0F09B

BASIC INSPECTION 9

DIAGNOSIS AND REPAIR WORK FLOW 9
Work Flow 9
Diagnostic Work Sheet 10

INSPECTION AND ADJUSTMENT 12

ADDITIONAL SERVICE WHEN REPLACING CONTROL UNIT 12
ADDITIONAL SERVICE WHEN REPLACING CONTROL UNIT : Precaution for TCM and CVT Assembly Replacement 12

FUNCTION DIAGNOSIS 13

CVT SYSTEM 13
System Diagram 13
Component Parts Location 14

MECHANICAL SYSTEM 16
Cross-Sectional View 16
System Diagram 17
System Description 17
Component Parts Location 18
Component Description 19

HYDRAULIC CONTROL SYSTEM 20
System Diagram 20
System Description 20
Component Parts Location 21
Component Description 22

CONTROL SYSTEM 23
System Diagram 23
System Description 23
Component Parts Location 25
Component Description 26

LOCK-UP AND SELECT CONTROL SYSTEM 27
System Diagram 27
System Description 27
Component Parts Location 28
Component Description 29

SHIFT CONTROL SYSTEM 30
System Diagram 30
System Description 30
Component Parts Location 31
Component Description 32

SHIFT LOCK SYSTEM 33
System Description 33
Component Parts Location 34
Component Description 34

ON BOARD DIAGNOSTIC (OBD) SYSTEM 35
Diagnosis Description 35

DIAGNOSIS SYSTEM (TCM) 37
CONSULT-III Function (TRANSMISSION) 37
Diagnostic Tool Function 40

COMPONENT DIAGNOSIS 41

U1000 CAN COMM CIRCUIT 41
Description 41
DTC Logic 41
Diagnosis Procedure 41

P0615 START SIGNAL 42
Description 42
DTC Logic 42
Diagnosis Procedure 42

P0703 STOP LAMP SWITCH 44
Description 44
DTC Logic 44
Diagnosis Procedure 44
Component Inspection (Stop Lamp Switch) 45

P0705 PARK/NEUTRAL POSITION SWITCH...47
Description 47

DTC Logic 47
Diagnosis Procedure 47
Component Inspection 48

P0710 CVT FLUID TEMPERATURE SENSOR ... 50
Description 50
DTC Logic 50
Diagnosis Procedure 50
Component Inspection (CVT Fluid Temperature Sensor) 51

P0715 INPUT SPEED SENSOR (PRI SPEED SENSOR) 52
Description 52
DTC Logic 52
Diagnosis Procedure 52

P0720 VEHICLE SPEED SENSOR CVT (SECONDARY SPEED SENSOR) 55
Description 55
DTC Logic 55
Diagnosis Procedure 55

P0725 ENGINE SPEED SIGNAL 59
Description 59
DTC Logic 59
Diagnosis Procedure 59

P0730 BELT DAMAGE 60
Description 60
DTC Logic 60
Diagnosis Procedure 60

P0740 TORQUE CONVERTER CLUTCH SOLENOID VALVE 62
Description 62
DTC Logic 62
Diagnosis Procedure 62
Component Inspection (Torque Converter Clutch Solenoid Valve) 63

P0744 A/T TCC S/V FUNCTION (LOCK -UP)... 64
Description 64
DTC Logic 64
Diagnosis Procedure 64
Component Inspection (Torque Converter Clutch Solenoid Valve) 65
Component Inspection (Lock-up Select Solenoid Valve) 65

P0745 LINE PRESSURE SOLENOID VALVE... 66
Description 66
DTC Logic 66
Diagnosis Procedure 66
Component Inspection [Pressure Control Solenoid Valve A (Line Pressure Solenoid Valve)] 67

P0746 PRESSURE CONTROL SOLENOID A PERFORMANCE (LINE PRESSURE SOLENOID VALVE) 68
Description 68
DTC Logic 68
Diagnosis Procedure 68
Component Inspection [Pressure Control Solenoid Valve A (Line Pressure Solenoid Valve)] 69

P0776 PRESSURE CONTROL SOLENOID B PERFORMANCE (SEC PRESSURE SOLENOID VALVE) 70
Description 70
DTC Logic 70
Diagnosis Procedure 70
Component Inspection [Pressure Control Solenoid Valve A (Line Pressure Solenoid Valve)] 71
Component Inspection [Pressure Control Solenoid Valve B (Secondary Pressure Solenoid Valve)] 71

P0778 PRESSURE CONTROL SOLENOID B ELECTRICAL (SEC PRESSURE SOLENOID VALVE) 72
Description 72
DTC Logic 72
Diagnosis Procedure 72
Component Inspection [Pressure Control Solenoid Valve B (Secondary Pressure Solenoid Valve)] 73

P0840 TRANSMISSION FLUID PRESSURE SENSOR A (SEC PRESSURE SENSOR) 74
Description 74
DTC Logic 74
Diagnosis Procedure 74

P0841 PRESSURE SENSOR FUNCTION 77
Description 77
DTC Logic 77
Diagnosis Procedure 77
Component Inspection [Pressure Control Solenoid Valve A (Line Pressure Solenoid Valve)] 78
Component Inspection [Pressure Control Solenoid Valve B (Secondary Pressure Solenoid Valve)] 78

P0845 TRANSMISSION FLUID PRESSURE SENSOR B (PRI PRESSURE SENSOR) 80
Description 80
DTC Logic 80
Diagnosis Procedure 80

P0868 SECONDARY PRESSURE DOWN 83
Description 83
DTC Logic 83
Diagnosis Procedure 83
Component Inspection [Pressure Control Solenoid Valve A (Line Pressure Solenoid Valve)] 84

Component Inspection [Pressure Control Solenoid Valve B (Secondary Pressure Solenoid Valve)] 84

P1701 TRANSMISSION CONTROL MODULE (POWER SUPPLY) 85
Description 85
DTC Logic 85
Diagnosis Procedure 85

P1705 THROTTLE POSITION SENSOR 88
Description 88
DTC Logic 88
Diagnosis Procedure 88

P1722 ESTM VEHICLE SPEED SIGNAL 89
Description 89
DTC Logic 89
Diagnosis Procedure 89

P1723 CVT SPEED SENSOR FUNCTION 91
Description 91
DTC Logic 91
Diagnosis Procedure 91

P1726 ELECTRIC THROTTLE CONTROL SYSTEM 93
Description 93
DTC Logic 93
Diagnosis Procedure 93

P1740 LOCK-UP SELECT SOLENOID VALVE 94
Description 94
DTC Logic 94
Diagnosis Procedure 94
Component Inspection (Lock-up Select Solenoid Valve) 95

P1745 LINE PRESSURE CONTROL 96
Description 96
DTC Logic 96
Diagnosis Procedure 96

P1777 STEP MOTOR 97
Description 97
DTC Logic 97
Diagnosis Procedure 97
Component Inspection (Step Motor) 98

P1778 STEP MOTOR - FUNCTION 100
Description 100
DTC Logic 100
Diagnosis Procedure 100

SHIFT POSITION INDICATOR CIRCUIT 102
Description 102
Component Function Check 102
Diagnosis Procedure 102

SHIFT LOCK SYSTEM 103
Description 103
Wiring Diagram - CVT SHIFT LOCK SYSTEM - 103
Component Function Check 105
Diagnosis Procedure 106
Component Inspection (Stop Lamp Switch) 107

SPORT MODE SWITCH 108
Description 108
Component Function Check 108
Diagnosis Procedure 108

ECU DIAGNOSIS 111

TCM 111
Reference Value 111
Wiring Diagram - CVT CONTROL SYSTEM - 116
Fail-safe 120
DTC Inspection Priority Chart 121
DTC Index 121

SYMPTOM DIAGNOSIS 123

SYSTEM SYMPTOM 123
Symptom Table 123

PRECAUTION 135

PRECAUTIONS 135
Precaution for Supplemental Restraint System (SRS) "AIR BAG" and "SEAT BELT PRE-TENSIONER" 135
Precaution Necessary for Steering Wheel Rotation after Battery Disconnect 135
Precaution for Procedure without Cowl Top Cover. 136
Precaution for On Board Diagnosis (OBD) System of CVT and Engine 136
Precaution for TCM and CVT Assembly Replacement 136
Removal and Installation Procedure for CVT Unit Connector 136
Precaution 138
Service Notice or Precaution 138
ATFTEMP COUNT Conversion Table 139

PREPARATION 140

PREPARATION 140
Special Service Tools 140
Commercial Service Tools 140

ON-VEHICLE MAINTENANCE 142

CVT FLUID 142
Inspection 142
Changing 143

STALL TEST 144
Inspection and Judgment 144

LINE PRESSURE TEST 146
Inspection and Judgment 146

ROAD TEST 148
Description 148
Check before Engine Is Started 148
Check at Idle 149
Cruise Test 150

CVT POSITION 152
Inspection and Adjustment 152

ON-VEHICLE REPAIR 153

TRANSMISSION CONTROL MODULE 153
Exploded View 153
Removal and Installation 153
Adjustment 154

CONTROL DEVICE 155
Exploded View 155
Removal and Installation 155
Inspection and Adjustment 156

CONTROL CABLE 157
Exploded View 157
Removal and Installation 157
Inspection and Adjustment 158

OIL PAN 159
Exploded View 159
Removal and Installation 159
Inspection 160

SECONDARY SPEED SENSOR 161
Exploded View 161
Removal and Installation 161
Inspection 161

DIFFERENTIAL SIDE OIL SEAL 162
Exploded View 162
Removal and Installation 162
Inspection 163

AIR BREATHER HOSE 164
Exploded View 164
Removal and Installation 164

FLUID COOLER SYSTEM 165
Exploded View 165
Removal and Installation 165
Inspection 167

REMOVAL AND INSTALLATION 168

TRANSAXLE ASSEMBLY 168
Exploded View 168
Removal and Installation 168
Inspection 170

DISASSEMBLY AND ASSEMBLY 172

TORQUE CONVERTER 172
Exploded View 172
Disassembly 172
Assembly 172
Inspection 173

SERVICE DATA AND SPECIFICATIONS (SDS) 174

SERVICE DATA AND SPECIFICATIONS (SDS) 174
General Specification 174
Vehicle Speed When Shifting Gears 174
Stall Speed 174
Line Pressure 174
Solenoid Valves 175
CVT Fluid Temperature Sensor 175
Primary Speed Sensor 175
Secondary Speed Sensor 175
Step Motor 175
Torque Converter 175

CVT: RE0F10A

BASIC INSPECTION 176

DIAGNOSIS AND REPAIR WORK FLOW 176
Work Flow 176
Diagnostic Work Sheet 177

INSPECTION AND ADJUSTMENT 179

ADDITIONAL SERVICE WHEN REPLACING CONTROL UNIT 179
ADDITIONAL SERVICE WHEN REPLACING CONTROL UNIT : Service After Replacing TCM and Transaxle Assembly 179

FUNCTION DIAGNOSIS 181

CVT SYSTEM 181
System Diagram 181
Component Parts Location 182

MECHANICAL SYSTEM 183
Cross-Sectional View 183
System Diagram 184
System Description 184
Component Parts Location 185
Component Description 186

HYDRAULIC CONTROL SYSTEM 187
System Diagram 187
System Description 187
Component Parts Location 188
Component Description 189

CONTROL SYSTEM 190
System Diagram 190
System Description 190
Component Parts Location 192
Component Description 193

LOCK-UP AND SELECT CONTROL SYSTEM 194

System Diagram 194
System Description 194
Component Parts Location 195
Component Description 196

SHIFT CONTROL SYSTEM 197
System Diagram 197
System Description 197
Component Parts Location 198
Component Description 199

SHIFT LOCK SYSTEM 200
System Description 200
Component Parts Location 201
Component Description 201

ON BOARD DIAGNOSTIC (OBD) SYSTEM ... 202
Diagnosis Description 202

DIAGNOSIS SYSTEM (TCM) 204
CONSULT-III Function (TRANSMISSION) 204
Diagnostic Tool Function 207

COMPONENT DIAGNOSIS 208

U1000 CAN COMM CIRCUIT 208
Description 208
DTC Logic 208
Diagnosis Procedure 208

U1010 CONTROL UNIT (CAN) 209
Description 209
DTC Logic 209
Diagnosis Procedure 209

P0703 STOP LAMP SWITCH 210
Description 210
DTC Logic 210
Diagnosis Procedure 210
Component Inspection (Stop Lamp Switch) 211

P0705 PARK/NEUTRAL POSITION SWITCH. 213
Description 213
DTC Logic 213
Diagnosis Procedure 213
Component Inspection (Park/Neutral Position Switch) 214

P0710 CVT FLUID TEMPERATURE SENSOR .. 216
Description 216
DTC Logic 216
Diagnosis Procedure 216
Component Inspection (CVT Fluid Temperature Sensor) 217

P0715 INPUT SPEED SENSOR (PRI SPEED SENSOR) 218
Description 218
DTC Logic 218
Diagnosis Procedure 218

P0720 VEHICLE SPEED SENSOR CVT (SECONDARY SPEED SENSOR) 222
Description 222
DTC Logic 222
Diagnosis Procedure 222

P0725 ENGINE SPEED SIGNAL 226
Description 226
DTC Logic 226
Diagnosis Procedure 226

P0730 BELT DAMAGE 228
Description 228
DTC Logic 228
Diagnosis Procedure 228

P0740 TORQUE CONVERTER CLUTCH SOLENOID VALVE 230
Description 230
DTC Logic 230
Diagnosis Procedure 230
Component Inspection (Torque Converter Clutch Solenoid Valve) 231

P0744 A/T TCC S/V FUNCTION (LOCK -UP) . 232
Description 232
DTC Logic 232
Diagnosis Procedure 232
Component Inspection (Torque Converter Clutch Solenoid Valve) 233
Component Inspection (Lock-up Select Solenoid Valve) 233

P0745 LINE PRESSURE SOLENOID VALVE. 234
Description 234
DTC Logic 234
Diagnosis Procedure 234
Component Inspection [Pressure Control Solenoid Valve A (Line Pressure Solenoid Valve)] 235

P0746 PRESSURE CONTROL SOLENOID A PERFORMANCE (LINE PRESSURE SOLENOID VALVE) 236
Description 236
DTC Logic 236
Diagnosis Procedure 236
Component Inspection [Pressure Control Solenoid Valve A (Line Pressure Solenoid Valve)] 237

P0776 PRESSURE CONTROL SOLENOID B PERFORMANCE (SEC PRESSURE SOLENOID VALVE) 238
Description 238
DTC Logic 238
Diagnosis Procedure 238
Component Inspection [Pressure Control Solenoid Valve A (Line Pressure Solenoid Valve)] 239
Component Inspection [Pressure Control Solenoid Valve B (Secondary Pressure Solenoid Valve)] 239

P0778 PRESSURE CONTROL SOLENOID B ELECTRICAL (SEC PRESSURE SOLENOID VALVE) 240
Description 240
DTC Logic 240
Diagnosis Procedure 240
Component Inspection [Pressure Control Solenoid Valve B (Secondary Pressure Solenoid Valve)] 241

P0840 TRANSMISSION FLUID PRESSURE SENSOR A (SEC PRESSURE SENSOR) 242
Description 242
DTC Logic 242
Diagnosis Procedure 242

P0841 PRESSURE SENSOR FUNCTION 245
Description 245
DTC Logic 245
Diagnosis Procedure 245
Component Inspection [Pressure Control Solenoid Valve A (Line Pressure Solenoid Valve)] 246
Component Inspection [Pressure Control Solenoid Valve B (Secondary Pressure Solenoid Valve)] 246

P0868 SECONDARY PRESSURE DOWN 247
Description 247
DTC Logic 247
Diagnosis Procedure 247
Component Inspection [Pressure Control Solenoid Valve A (Line Pressure Solenoid Valve)] 248
Component Inspection [Pressure Control Solenoid Valve B (Secondary Pressure Solenoid Valve)] 248

P1701 TRANSMISSION CONTROL MODULE (POWER SUPPLY) 249
Description 249
DTC Logic 249
Diagnosis Procedure 249

P1705 THROTTLE POSITION SENSOR 252
Description 252
DTC Logic 252
Diagnosis Procedure 252

P1722 ESTM VEHICLE SPEED SIGNAL 253
Description 253
DTC Logic 253
Diagnosis Procedure 253

P1723 CVT SPEED SENSOR FUNCTION 255
Description 255
DTC Logic 255
Diagnosis Procedure 255

P1726 ELECTRIC THROTTLE CONTROL SYSTEM 257
Description 257
DTC Logic 257
Diagnosis Procedure 257

P1740 LOCK-UP SELECT SOLENOID VALVE 258
Description 258
DTC Logic 258
Diagnosis Procedure 258
Component Inspection (Lock-up Select Solenoid Valve) 259

P1745 LINE PRESSURE CONTROL 260
Description 260
DTC Logic 260
Diagnosis Procedure 260

P1777 STEP MOTOR 261
Description 261
DTC Logic 261
Diagnosis Procedure 261
Component Inspection (Step Motor) 263

P1778 STEP MOTOR - FUNCTION 264
Description 264
DTC Logic 264
Diagnosis Procedure 264

SHIFT POSITION INDICATOR CIRCUIT 266
Description 266
Component Function Check 266
Diagnosis Procedure 266

SHIFT LOCK SYSTEM 267
Description 267
Wiring Diagram - CVT SHIFT LOCK SYSTEM - .. 267
Component Function Check 269
Diagnosis Procedure 270
Component Inspection (Stop Lamp Switch) 271

SPORT MODE SWITCH 272
Description 272
Component Function Check 272
Diagnosis Procedure 272

ECU DIAGNOSIS 275

TCM 275
Reference Value 275
Wiring Diagram - CVT CONTROL SYSTEM - 279
Fail-safe 283
DTC Inspection Priority Chart 284
DTC Index 284

SYMPTOM DIAGNOSIS 286

SYSTEM SYMPTOM 286
Symptom Table 286

PRECAUTION 297

PRECAUTIONS 297

Precaution for Supplemental Restraint System (SRS) "AIR BAG" and "SEAT BELT PRE-TENSIONER" 297
Precaution Necessary for Steering Wheel Rotation after Battery Disconnect 297
Precaution for Procedure without Cowl Top Cover. 298
Precaution for On Board Diagnosis (OBD) System of CVT and Engine 298
Precaution for TCM and CVT Assembly Replacement 298
Removal and Installation Procedure for CVT Unit Connector 298
Precaution 299
Service Notice or Precaution 300
ATFTEMP COUNT Conversion Table 301

PREPARATION 302

PREPARATION 302
Special Service Tools 302
Commercial Service Tools 302

ON-VEHICLE MAINTENANCE 304

CVT FLUID 304
Inspection 304
Changing 305

STALL TEST 306
Inspection and Judgment 306

LINE PRESSURE TEST 308
Inspection and Judgment 308

ROAD TEST 310
Description 310
Check before Engine Is Started 310
Check at Idle 311
Cruise Test 312

CVT POSITION 314
Inspection and Adjustment 314

ON-VEHICLE REPAIR 315

TRANSMISSION CONTROL MODULE 315
Exploded View 315
Removal and Installation 315

CONTROL DEVICE 317
Exploded View 317
Removal and Installation 317
Inspection and Adjustment 318

CONTROL CABLE 319
Exploded View 319
Removal and Installation 319
Inspection and Adjustment 320

OIL PAN 321
Exploded View 321
Removal and Installation 321
Inspection 322

PRIMARY SPEED SENSOR 323
Exploded View 323
Removal and Installation 323
Inspection 323

SECONDARY SPEED SENSOR 324
Exploded View 324
Removal and Installation 324
Inspection 324

DIFFERENTIAL SIDE OIL SEAL 325
Exploded View 325
Removal and Installation 325
Inspection 326

OIL PUMP FITTING BOLT 327
Description 327
Exploded View 327
Removal and Installation 327
Inspection 327

AIR BREATHER HOSE 328
Exploded View 328
Removal and Installation 328

FLUID COOLER SYSTEM 329
Exploded View 329
Removal and Installation 329
Inspection 331

REMOVAL AND INSTALLATION 332

TRANSAXLE ASSEMBLY 332
Exploded View 332
Removal and Installation 332
Inspection 334

DISASSEMBLY AND ASSEMBLY 335

TORQUE CONVERTER AND CONVERTER HOUSING OIL SEAL 335
Exploded View 335
Disassembly 335
Assembly 335
Inspection 336

SERVICE DATA AND SPECIFICATIONS (SDS) 337

SERVICE DATA AND SPECIFICATIONS (SDS) 337
General Specification 337
Vehicle Speed When Shifting Gears 337
Stall Speed 337
Line Pressure 337
Solenoid Valves 338
CVT Fluid Temperature Sensor 338
Primary Speed Sensor 338
Secondary Speed Sensor 338

Step Motor 338
Torque Converter 338

BASIC INSPECTION

DIAGNOSIS AND REPAIR WORK FLOW

Work Flow

INFOID:0000000003848914

INTRODUCTION

The TCM receives signals from the vehicle speed sensor and PNP switch. Then it provides shift control or lock-up control via CVT solenoid valves.

The TCM also communicates with the ECM by means of signals sent from sensing elements used with the OBD-related parts of the CVT system for malfunction-diagnostic purposes. The TCM is capable of diagnosing malfunctioning parts while the ECM can store malfunctions in its memory.

Input and output signals must always be correct and stable in the operation of the CVT system. The CVT system must be in good operating condition and be free of valve seizure, solenoid valve malfunction, etc.

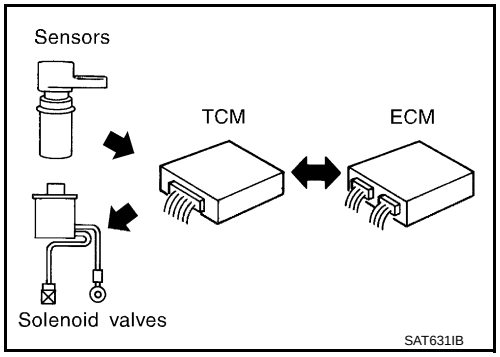

It is much more difficult to diagnose a malfunction that occurs intermittently rather than continuously. Most intermittent malfunctions are caused by poor electric connections or improper wiring. In this case, careful checking of suspected circuits may help prevent the replacement of good parts.

A visual check only may not find the cause of the malfunctions. A road test with CONSULT-III (or GST) or a circuit tester connected should be performed. Follow the “DETAILED FLOW”.

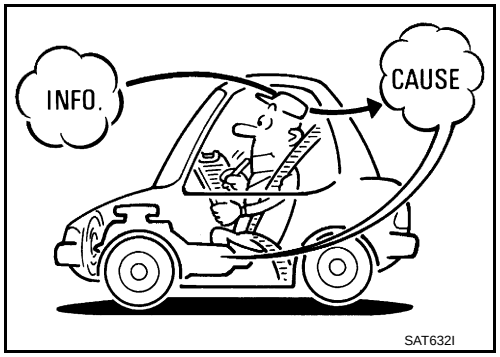

Before undertaking actual checks, take a few minutes to talk with a customer who approaches with a driveability complaint. The customer can supply good information about such malfunctions, especially intermittent ones. Find out what symptoms are present and under what conditions they occur. A “Diagnostic Work Sheet” as shown on the example (Refer to TM-10) should be used.

Start your diagnosis by looking for “conventional” malfunctions first. This will help troubleshoot driveability malfunctions on an electronically controlled engine vehicle.

Also check related Service Bulletins.

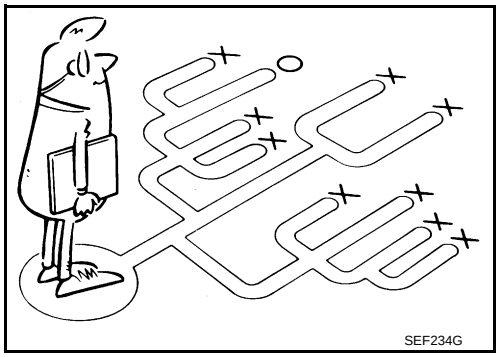

DETAILED FLOW

1. COLLECT THE INFORMATION FROM THE CUSTOMER

Get the detailed information from the customer about the symptom (the condition and the environment when the incident/malfunction occurred) using the diagnosis work sheet. Refer to TM-10, "Diagnostic Work Sheet".

>> GO TO 2.

2. CHECK SYMPTOM 1

Check the following items based on the information obtained from the customer.

- Fail-safe. Refer to TM-120, "Fail-safe".
- CVT fluid inspection. Refer to TM-142, "Inspection".
- Line pressure test. Refer to TM-146, "Inspection and Judgment".

- Stall test. Refer to TM-144, "Inspection and Judgment".

>> GO TO 3.

3. CHECK DTC

1. Check DTC.
2. Perform the following procedure if DTC is detected.

- Record DTC.
- Erase DTC. Refer to TM-35, "Diagnosis Description".

Is any DTC detected?

YES >> GO TO 4.
NO >> GO TO 5.

4. PERFORM DIAGNOSTIC PROCEDURE

Perform “Diagnostic Procedure” for the displayed DTC. Repair detected items.

>> GO TO 5.

5. PERFORM DTC CONFIRMATION PROCEDURE

Perform “DTC CONFIRMATION PROCEDURE” for the displayed DTC.

Is DTC detected?

YES >> GO TO 4.
NO >> GO TO 6.

6. CHECK SYMPTOM 2

Confirm the symptom described by the customer.

Is any malfunction present?

YES >> GO TO 7.
NO >> INSPECTION END

7. ROAD TEST

Perform “ROAD TEST”. Refer to TM-148, "Description".

>> GO TO 8.

8. CHECK SYMPTOM 3

Confirm the symptom described by the customer.

Is any malfunction present?

YES >> GO TO 2.
NO >> INSPECTION END

Diagnostic Work Sheet

INFOID:0000000003848915

INFORMATION FROM CUSTOMER

KEY POINTS

- **WHAT**..... Vehicle & CVT model
- **WHEN**..... Date, Frequencies
- **WHERE**..... Road conditions
- **HOW**..... Operating conditions, Symptoms

Customer name MR/MS	Model & Year	VIN
Trans. Model	Engine	Mileage
Malfunction Date	Manuf. Date	In Service Date
Frequency	o Continuous o Intermittent (times a day)	

Symptoms	o Vehicle does not move. (o Any position o Particular position)	
	o No shift	
	o Lock-up malfunction	
	o Shift shock or slip (o N → D o N → R o Lock-up o Any drive position)	
	o Noise or vibration	
	o No pattern select	
	o Others ( )	
Malfunction Indicator (MI)	o Continuously lit	o Not lit

DIAGNOSTIC WORK SHEET

1	o Read the item on cautions concerning fail-safe and understand the customer's complaint.			TM-120
2	o CVT fluid inspection, stall test and line pressure test			
		o CVT fluid inspection		TM-142
			o Leak (Repair leak location.) o State o Amount	
		o Stall test		TM-144 TM-146
			o Torque converter one-way clutch o Reverse brake o Forward clutch o Steel belt o Engine o Line pressure low o Primary pulley o Secondary pulley	
		o Line pressure inspection - Suspected part:		
3	o Perform self-diagnosis.			TM-37
		Enter checks for detected items.		
4	o Perform road test.			TM-148
	4-1.	Check before engine is started		TM-148
	4-2.	Check at idle		TM-149
	4-3.	Cruise test		TM-150
	o Check malfunction phenomena to repair or replace malfunctioning part after completing all road tests.			TM-123
5	o Drive vehicle to check that the malfunction phenomenon has been resolved.			
6	o Erase the results of the self-diagnosis from the TCM and the ECM.			

INSPECTION AND ADJUSTMENT

ADDITIONAL SERVICE WHEN REPLACING CONTROL UNIT

ADDITIONAL SERVICE WHEN REPLACING CONTROL UNIT : Precaution for TCM and CVT Assembly Replacement

INFOID:0000000003848916

CAUTION:
- **Check if new data (Unit ID) are entered correctly after replacing CVT assembly and erasing data in TCM. (Connect CONSULT-III, and then turn ignition switch OFF.)**
- **When replacing CVT assembly or TCM, refer to the pattern table below and erase the EEPROM in the TCM if necessary.**

EEPROM ERASING PATTERNS

CVT assembly	TCM	Erasing EEPROM in TCM	Remarks
Replaced	Replaced	Not required	Not required because the EEPROM in the TCM is in the default state. (CVT assembly must be replaced first.)
Not replaced	Replaced	Not required	Not required because the EEPROM in the TCM is in the default state.
Replaced	Not replaced	Required	Required because data has been written in the EEPROM in the TCM and because the TCM cannot write data from the ROM assembly in the transmission.

METHOD FOR ERASING THE EEPROM IN THE TCM

1. Turn ignition switch ON.
2. Move selector lever to “R” position.
3. Perform “Self-Diagnostic Results” mode for “TRANSMISSION”.
4. Press the brake pedal and turn the brake switch ON.
5. Press the accelerator pedal (0.5/8 - 4/8 throttle) not to exceed the half, and hold it in the half or less open position. (This will set the closed throttle position signal to OFF and the wide open throttle position signal to OFF.)
6. Perform “ERASE”.
7. Wait 3 seconds and then release the accelerator pedal.
8. Turn ignition switch OFF.

METHOD FOR WRITING DATA FROM THE ROM ASSEMBLY IN THE TRANSAXLE

In the following procedure, the TCM reads data from the ROM assembly and writes it to the EEPROM in the TCM.

1. Erase the EEPROM in the TCM.
2. Move selector lever to “P” position.
3. Turn ignition switch ON.

CHECK METHOD

- Standard: About 2 seconds after the ignition switch ON, the CVT indicator lamp lights up for 2 seconds.
- Non-standard: Even after the ignition switch ON, the CVT indicator lamp does not light up after 2 seconds or illuminates immediately.

  CAUTION:
  Perform in the “P” or “N” position.

Action for Non-standard
- Replace the CVT assembly.
- Replace the TCM.

FUNCTION DIAGNOSIS

CVT SYSTEM

System Diagram

INFOID:0000000003848917

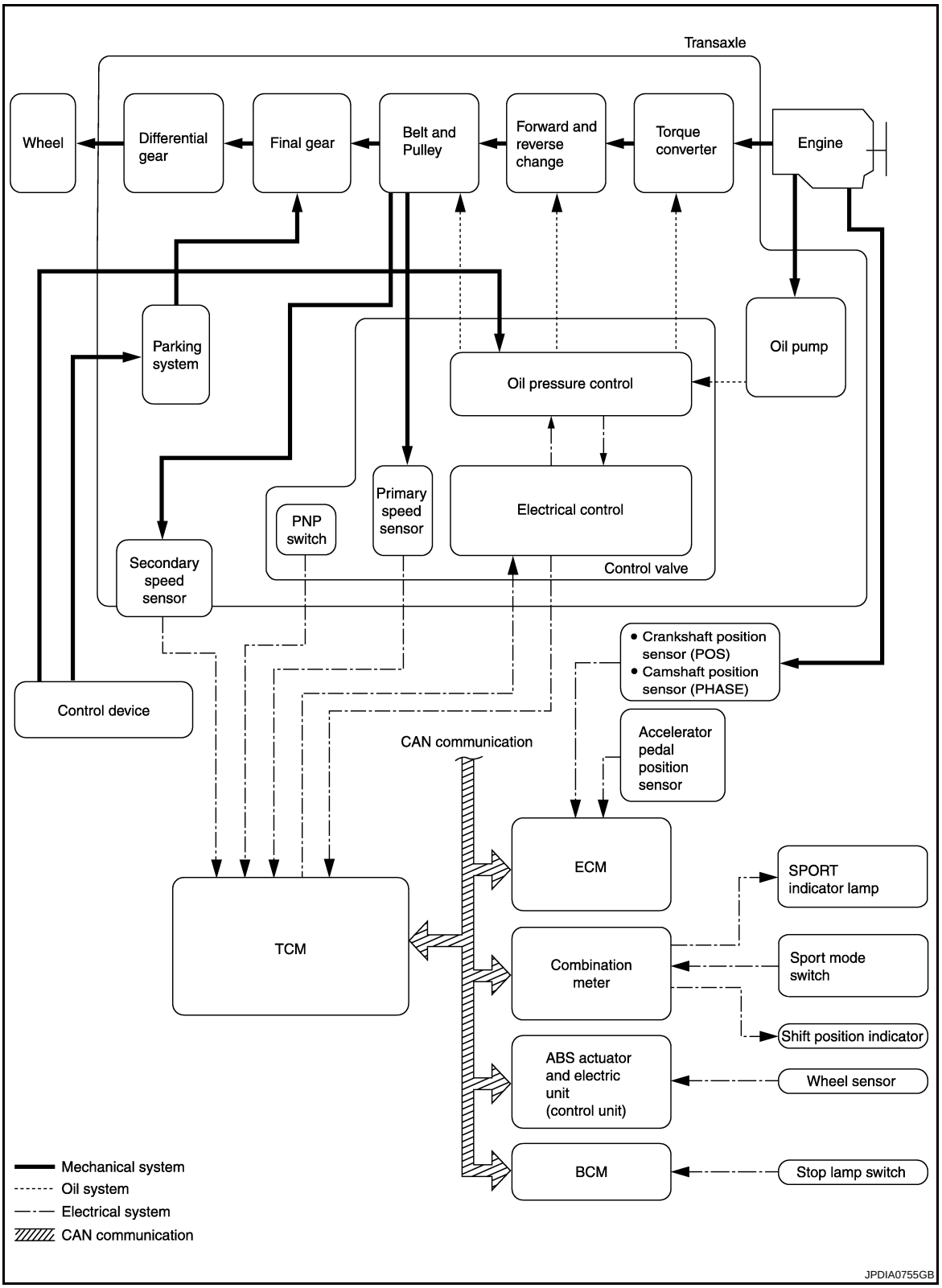

Component Parts Location

INFOID:0000000003848918

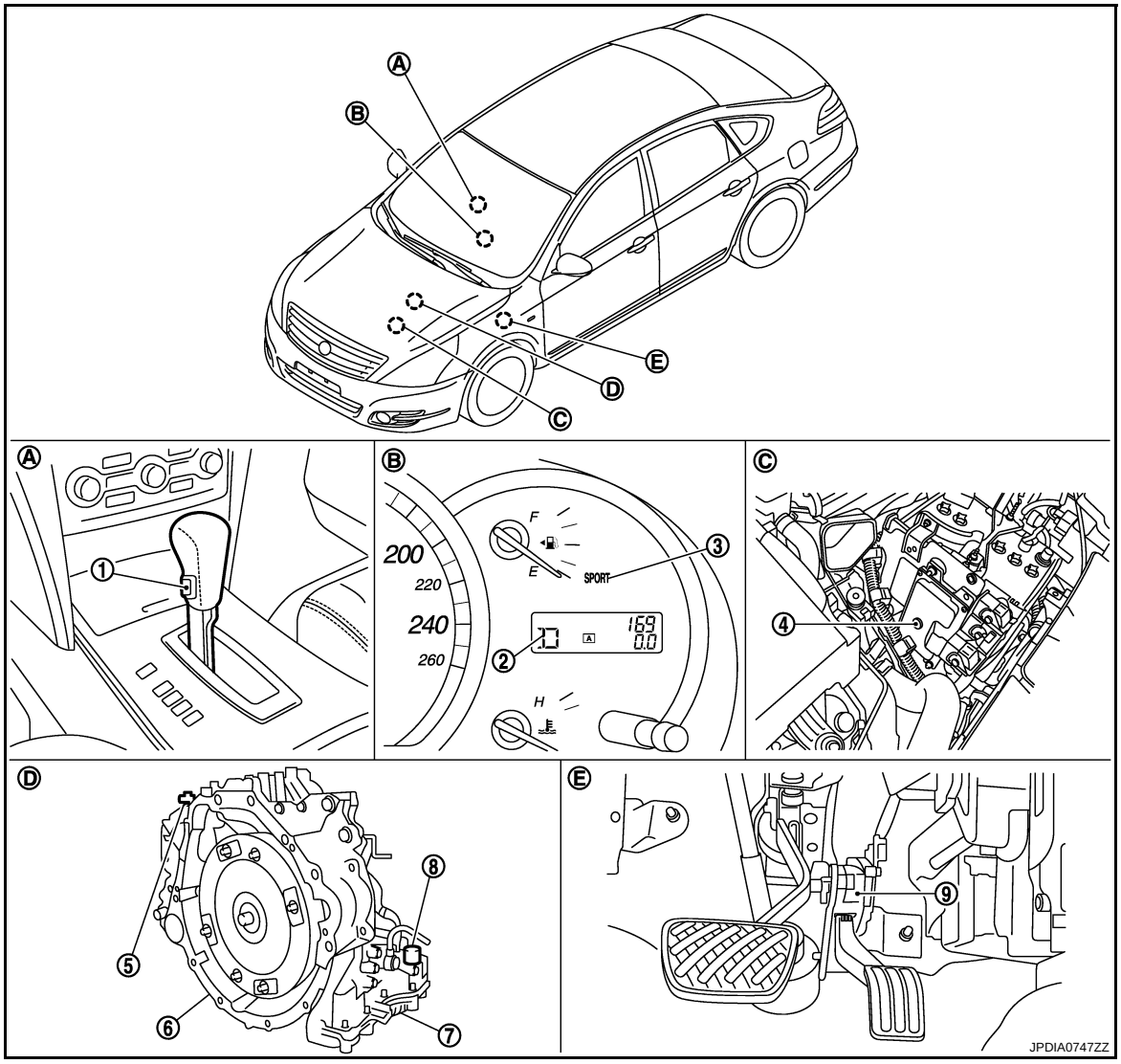

1.	Sport mode switch	2.	Shift position indicator	3.	SPORT indicator lamp
4.	TCM	5.	Secondary speed sensor	6.	Primary pressure sensor*1
7.	Control valve assembly*2	8.	CVT unit connector	9.	Accelerator pedal position sensor
A.	Center console	B.	Combination meter	C.	Engine room LH
D.	CVT assembly	E.	Accelerator pedal, upper		

*1: Primary pressure sensor is included in CVT assembly.

*2: Control valve assembly is included in CVT assembly.

NOTE:

The following components are included in control valve assembly (7).

- PNP switch
- Primary speed sensor
- Step motor
- Secondary pressure solenoid valve
- Line pressure solenoid valve
- Torque converter clutch solenoid valve
- Shift control valve
- Secondary valve
- Manual valve
- Lock-up select solenoid valve

- CVT fluid temperature sensor
- Secondary pressure sensor
- ROM assembly

MECHANICAL SYSTEM

Cross-Sectional View

INFOID:0000000003848919

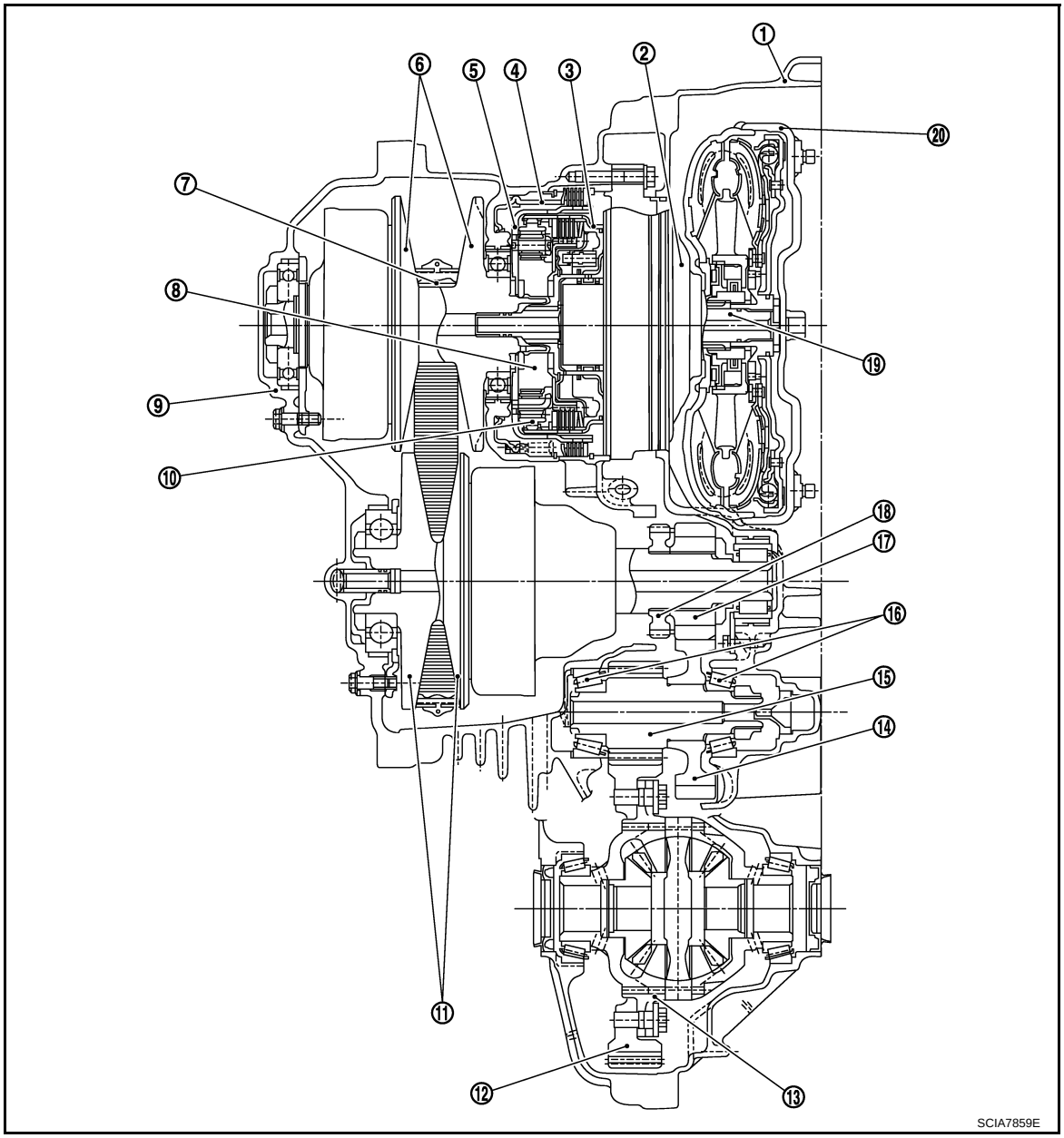

1. Converter housing	2. Oil pump	3. Forward clutch
4. Reverse brake	5. Planetary carrier	6. Primary pulley
7. Steel belt	8. Sun gear	9. Side cover
10. Internal gear	11. Secondary pulley	12. Final gear
13. Differential case	14. Idler gear	15. Reduction gear
16. Taper roller bearing	17. Output gear	18. Parking gear
19. Input shaft	20. Torque converter	

System Diagram

INFOID:0000000003848920

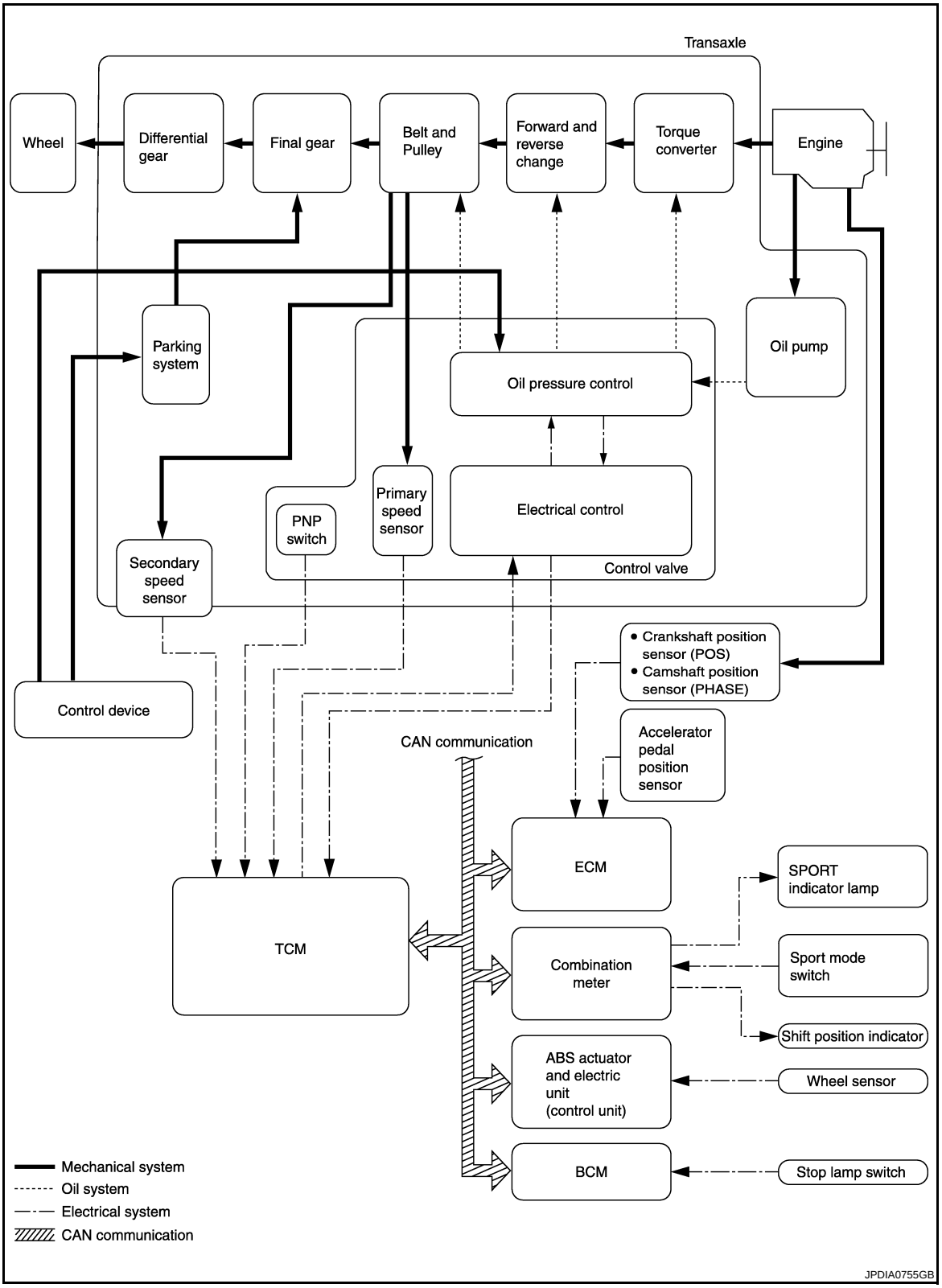

System Description

INFOID:0000000003848921

Transmits the power from the engine to the drive wheel.

Component Parts Location

INFOID:0000000003848922

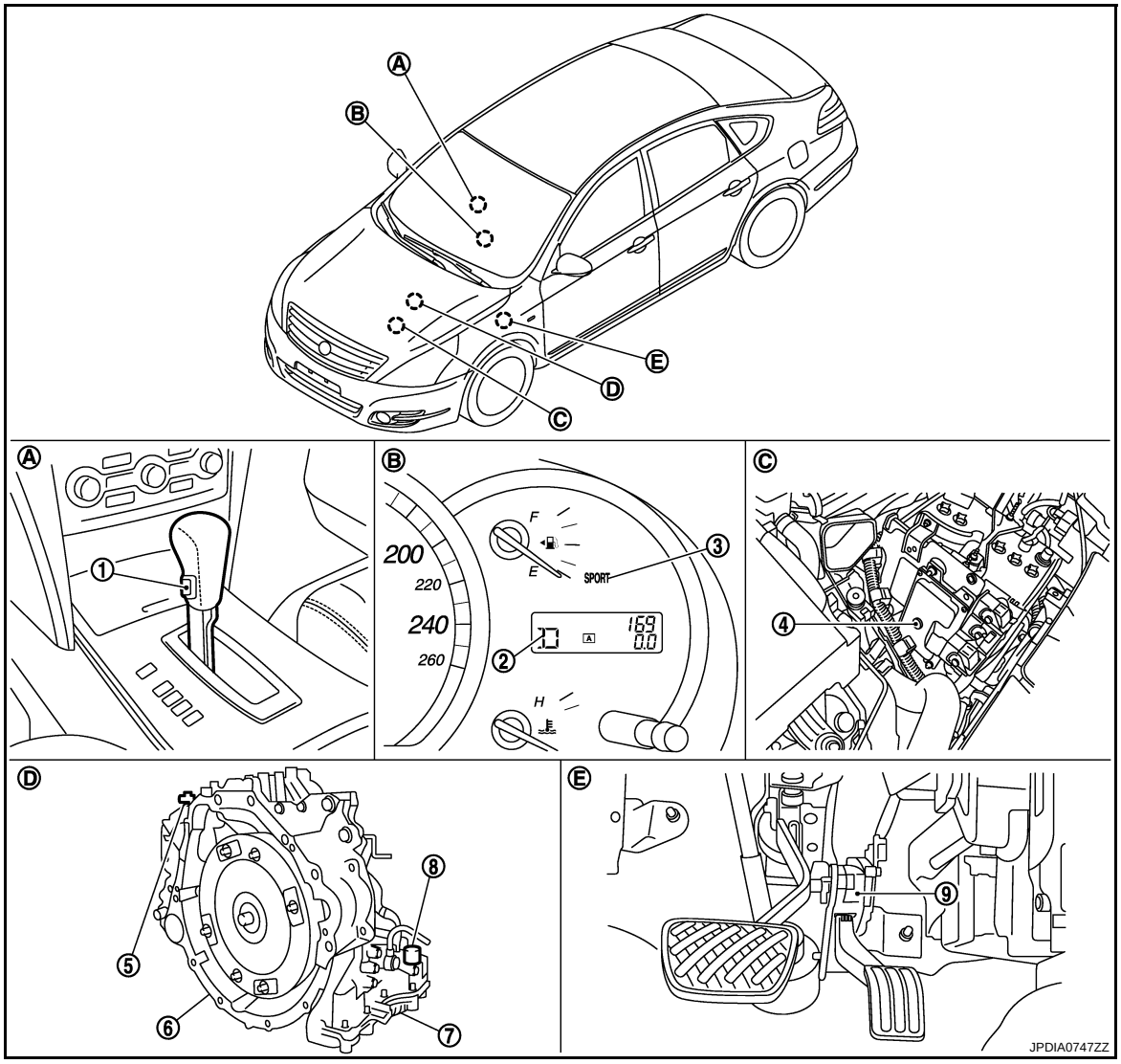

1.	Sport mode switch	2.	Shift position indicator	3.	SPORT indicator lamp
4.	TCM	5.	Secondary speed sensor	6.	Primary pressure sensor*1
7.	Control valve assembly*2	8.	CVT unit connector	9.	Accelerator pedal position sensor
A.	Control device	B.	Combination meter	C.	Engine room LH
D.	CVT assembly	E.	Accelerator pedal, upper		

*1: Primary pressure sensor is included in CVT assembly.

*2: Control valve assembly is included in CVT assembly.

NOTE:

The following components are included in control valve assembly (7).

- PNP switch
- Primary speed sensor
- Step motor
- Secondary pressure solenoid valve
- Line pressure solenoid valve
- Torque converter clutch solenoid valve
- Shift control valve
- Secondary valve
- Manual valve
- Lock-up select solenoid valve

- CVT fluid temperature sensor
- Secondary pressure sensor
- ROM assembly

Component Description

INFOID:0000000003848923

Item	Function
Torque converter	The torque converter is the device that increases the engine torque as well as the conventional AT and transmits it to the transaxle.
Oil pump	The adoption of a trochoidal oil pump with a flow control valve actuated directly by the engine enables the sufficient discharge from an oil pump in the low-rpm range and the adequate discharge adjustments in the high-rpm range.
Planetary gear	Perform the transmission of drive power and the switching of forward/backward movement.
Forward clutch	
Reverse brake	
Primary pulley	It is composed of a pair of pulleys (the groove width is changed freely in the axial direction) and the steel belt (the steel star wheels are placed continuously and the belt is guided with the multilayer steel rings on both sides). The groove width changes according to wrapping radius of steel belt and pulley from low status to overdrive status continuously with non-step. It is controlled with the oil pressures of primary pulley and secondary pulley.
Secondary pulley	
Steel belt	
Output gear	Reduction gear consists of primary deceleration (output gear and idler gear in pair) and secondary deceleration (reduction gear and final gear in pair). Each of them uses a helical gear.
Idler gear	
Reduction gear	
Final gear	
Differential	
Manual shaft	The parking rod rotates the parking pole and the parking pole engages with the parking gear when the manual shaft is in “P” position. As a result the parking gear and the output axis are fixed.
Parking rod	
Parking pawl	
Parking gear	

HYDRAULIC CONTROL SYSTEM

System Diagram

INFOID:0000000003848924

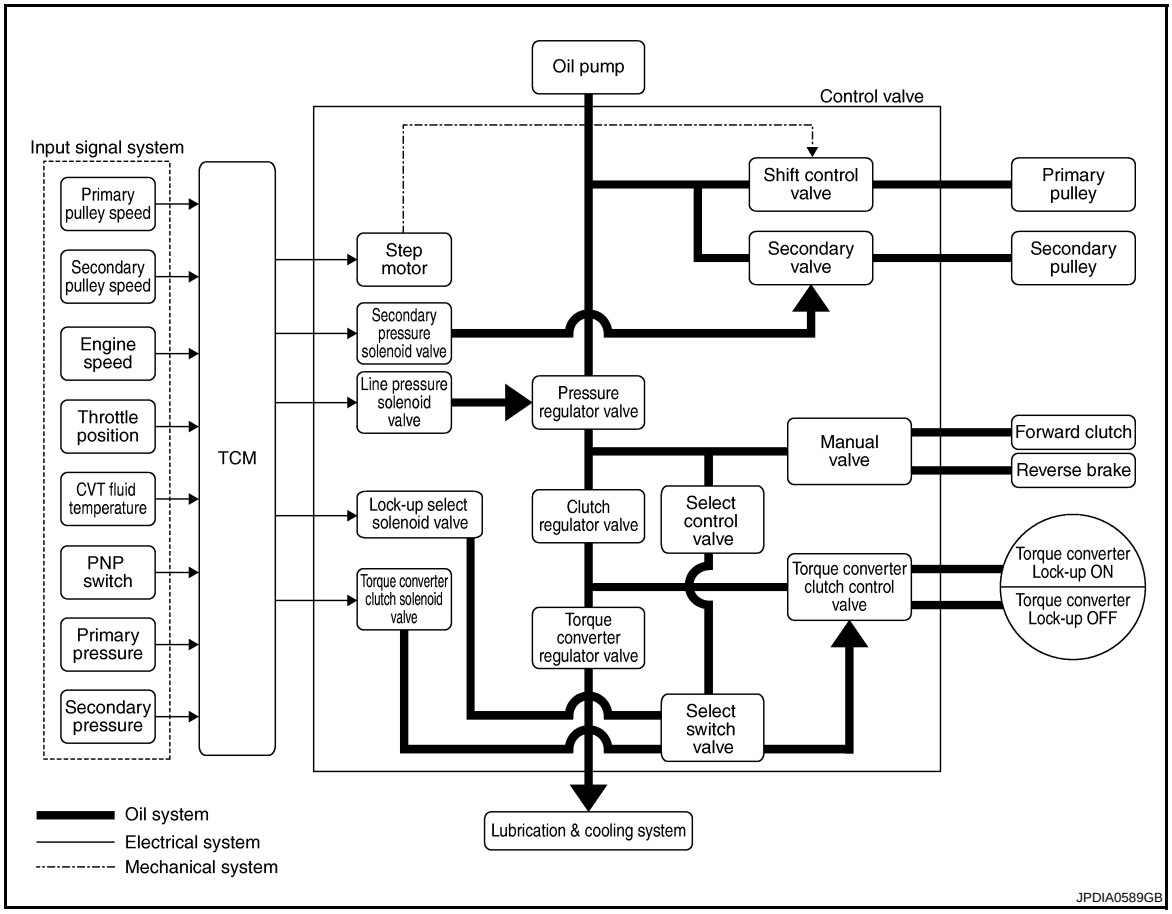

System Description

INFOID:0000000003848925

The hydraulic control mechanism consists of the oil pump directly driven by the engine, the hydraulic control valve that controls line pressure and transmission, and the input signal line.

LINE PRESSURE AND SECONDARY PRESSURE CONTROL

- When an input torque signal equivalent to the engine driving force is transmitted from the ECM to the TCM, the TCM controls the line pressure solenoid valve and secondary pressure solenoid valve.
- Line pressure solenoid valve activates pressure regulator valve, and line pressure from oil pump is adjusted for the optimum driving condition. Secondary pressure is controlled by lowering line pressure.

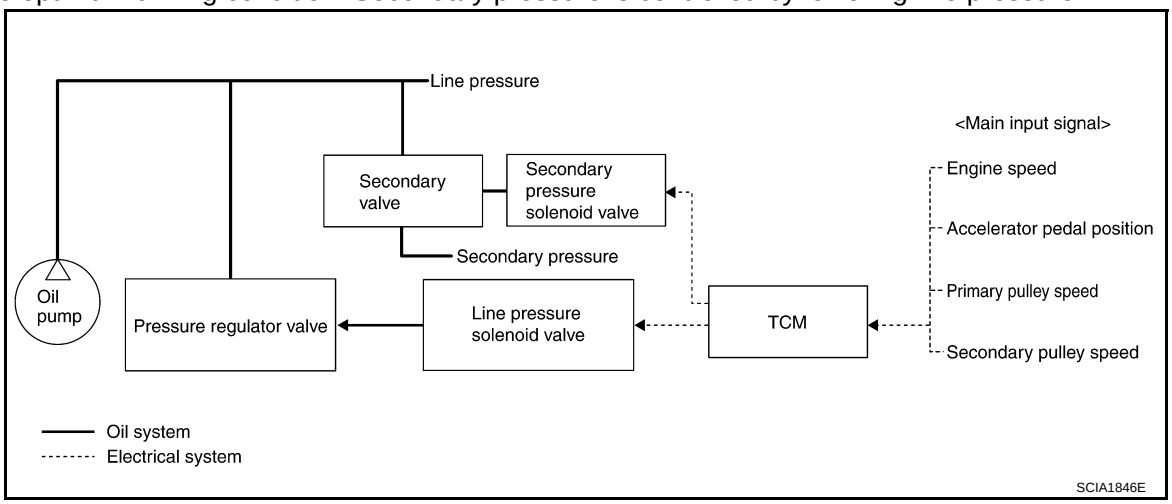

Normal Control

Optimize the line pressure and secondary pressure, depending on driving conditions, on the basis of the throttle position, the engine speed, the primary pulley (input) revolution speed, the secondary pulley (output) revolution speed, the brake signal, the PNP switch signal, the lock-up signal, the voltage, the target gear ratio, the fluid temperature, and the fluid pressure.

Feedback Control

For the normal fluid control and the select fluid control, secondary pressure is detected for feedback control by using a secondary pressure sensor to set a high-precision secondary pressure.

Component Parts Location

INFOID:0000000003848926

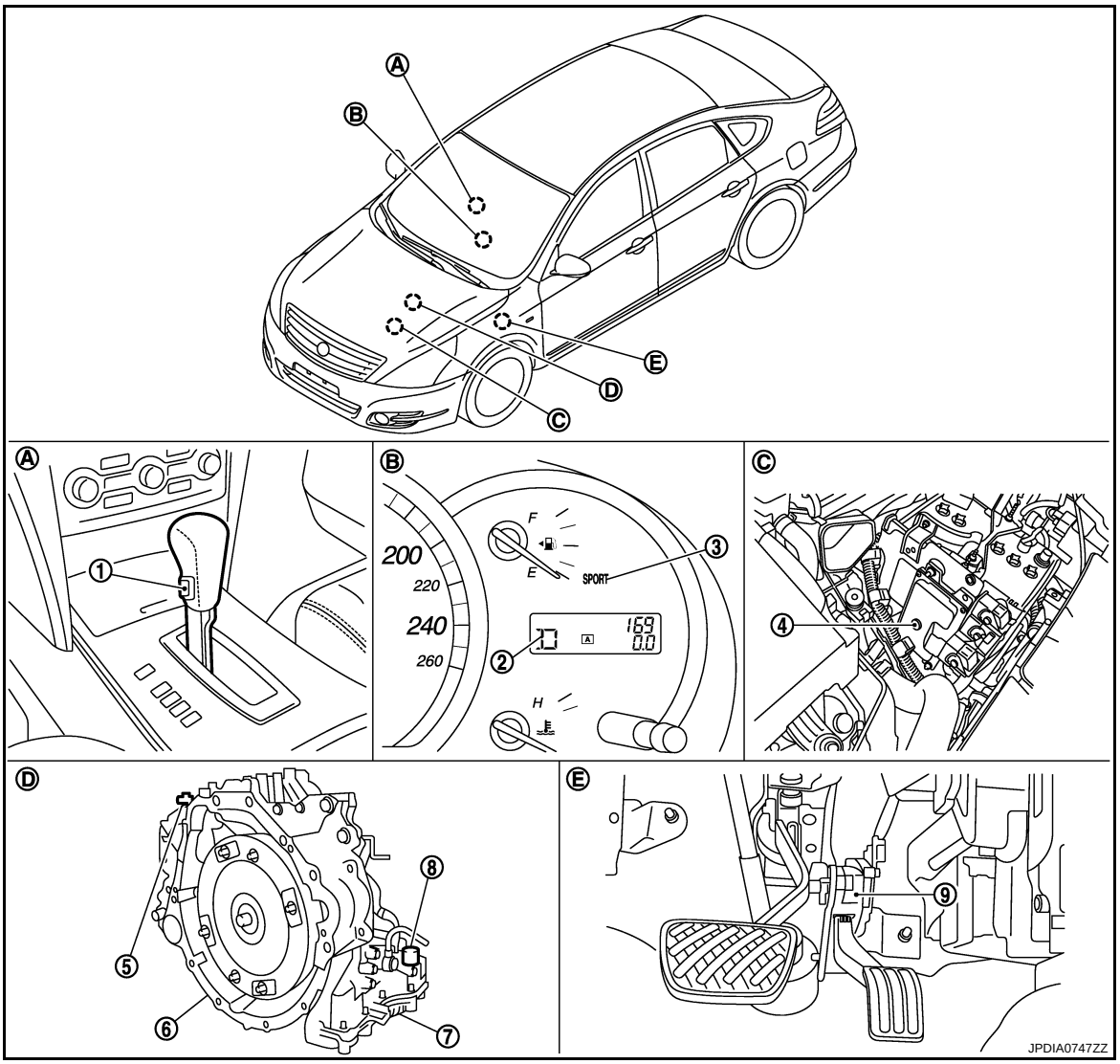

1.	Sport mode switch	2.	Shift position indicator	3.	SPORT indicator lamp
4.	TCM	5.	Secondary speed sensor	6.	Primary pressure sensor*1
7.	Control valve assembly*2	8.	CVT unit connector	9.	Accelerator pedal position sensor
A.	Control device	B.	Combination meter	C.	Engine room LH
D.	CVT assembly	E.	Accelerator pedal, upper		

*1: Primary pressure sensor is included in CVT assembly.

*2: Control valve assembly is included in CVT assembly.

NOTE:

The following components are included in control valve assembly (7).

- PNP switch

- Primary speed sensor
- Step motor
- Secondary pressure solenoid valve
- Line pressure solenoid valve
- Torque converter clutch solenoid valve
- Shift control valve
- Secondary valve
- Manual valve
- Lock-up select solenoid valve
- CVT fluid temperature sensor
- Secondary pressure sensor
- ROM assembly

Component Description

INFOID:0000000003848927

TRANSAXLE ASSEMBLY

Name	Function
Torque converter regulator valve	Optimizes the supply pressure for the torque converter depending on driving conditions.
Pressure regulator valve	Optimizes the discharge pressure from the oil pump depending on driving conditions.
TCC control valve	• Activates or deactivates the lock-up. • Locks up smoothly by opening lock-up operation excessively.
Shift control valve	Controls inflow/outflow of line pressure from the primary pulley depending on the stroke difference between the stepping motor and the primary pulley.
Secondary valve	Controls the line pressure from the secondary pulley depending on operating conditions.
Clutch regulator valve	Adjusts the clutch operating pressure depending on operating conditions.
Manual valve	Transmits the clutch operating pressure to each circuit in accordance with the selected position.
Select control valve	Engages forward clutch, reverse brake smoothly depending on select operation.
Select switch valve	The select switch valve enables to select engagement/disengagement of lock-up clutch and that of forward clutch and reverse clutch.
TCC solenoid valve	TM-62
Secondary pressure solenoid valve	TM-72
Line pressure solenoid valve	TM-66
Step motor	TM-97
Lock-up select solenoid valve	TM-94
Primary speed sensor	TM-52
Secondary speed sensor	TM-55
PNP switch	TM-47
Primary pulley	TM-19
Secondary pulley	
Forward clutch	
Torque converter	

EXCEPT TRANSAXLE ASSEMBLY

Name	Function
TCM	Judges driving condition according to signals from each sensor, and optimally controls variable speed mechanism.
Accelerator pedal position sensor	TM-88

CONTROL SYSTEM

System Diagram

INFOID:0000000003848928

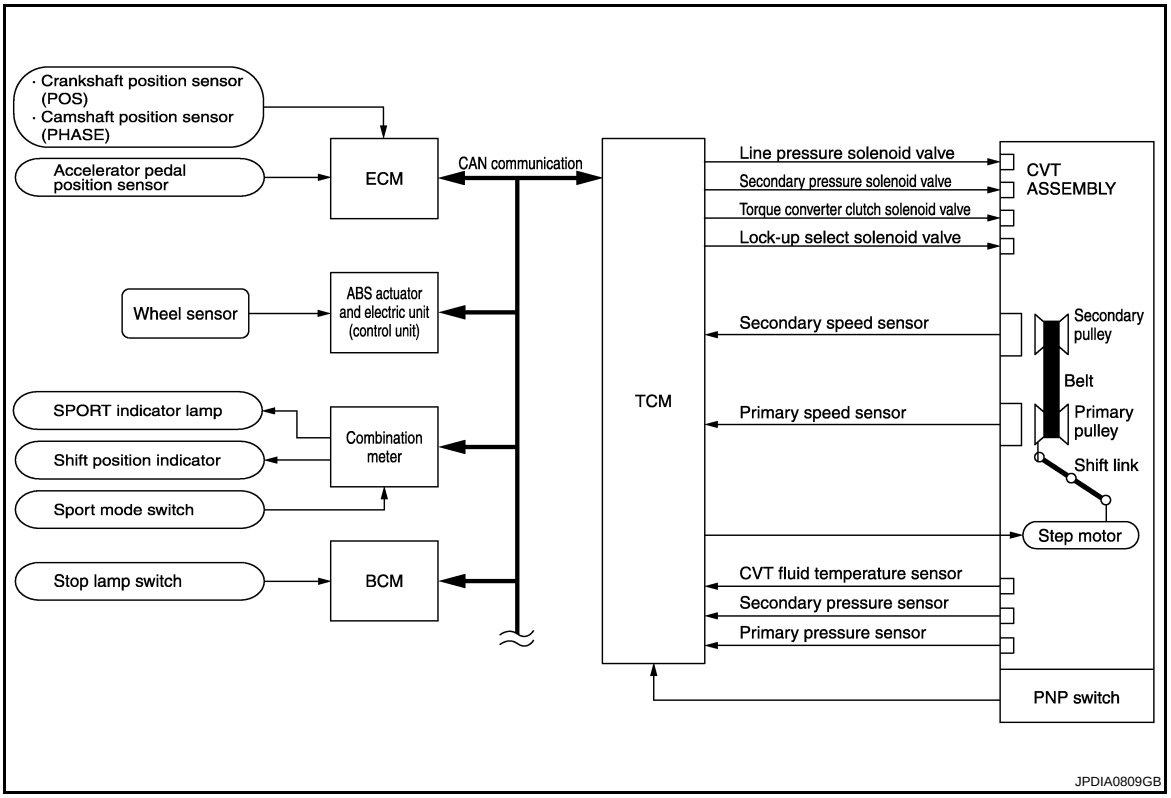

System Description

INFOID:0000000003848929

The CVT senses vehicle operating conditions through various sensors. It always controls the optimum shift position and reduces shifting and lock-up shocks.

TCM FUNCTION

The function of the TCM is to:

- Receive input signals sent from various switches and sensors.
- Determine required line pressure, shifting point, and lock-up operation.
- Send required output signals to the step motor and the respective solenoids.

SENSORS (or SIGNAL)		TCM		ACTUATORS
PNP switch Accelerator pedal position signal Closed throttle position signal Engine speed signal CVT fluid temperature sensor Vehicle speed signal Sport mode switch signal Stop lamp switch signal Primary speed sensor Secondary speed sensor Primary pressure sensor Secondary pressure sensor	⇒	Shift control Line pressure control Primary pressure control Secondary pressure control Lock-up control Engine brake control Vehicle speed control Fail-safe control Self-diagnosis CONSULT-III communication line Duet-EA control CAN system On board diagnosis	⇒	Step motor Torque converter clutch solenoid valve Lock-up select solenoid valve Line pressure solenoid valve Secondary pressure solenoid valve SPORT indicator lamp Shift position indicator Stater relay

INPUT/OUTPUT SIGNAL OF TCM

Control item		Fluid pressure control	Select control	Shift control	Lock-up control	CAN communication control	Fail-safe function*3
Input	PNP switch	X	X	X	X	X	X
	Accelerator pedal position signal*1	X	X	X	X	X	X
	Closed throttle position signal*1	X		X	X	X	
	Engine speed signal*1	X	X		X	X	X
	CVT fluid temperature sensor	X	X	X	X		X
	Sport mode switch signal*1	X		X	X	X	
	Stop lamp switch signal*1	X		X	X	X	
	Primary speed sensor	X		X	X	X	X
	Secondary speed sensor	X	X	X	X	X	X
	Primary pressure sensor	X		X			
	Secondary pressure sensor	X		X			X
	TCM power supply voltage signal	X	X	X	X	X	X
Output	Step motor			X			X
	TCC solenoid valve		X		X		X
	Lock-up select solenoid valve		X		X		X
	Line pressure solenoid valve	X	X	X			X
	Secondary pressure solenoid valve	X		X			X
	SPORT indicator signal*2			X		X	

- *1: Input via CAN communications.
- *2: Output via CAN communications.
- *3: If these input and output signals are different, the TCM triggers the fail-safe function.

Component Parts Location

INFOID:0000000003848930

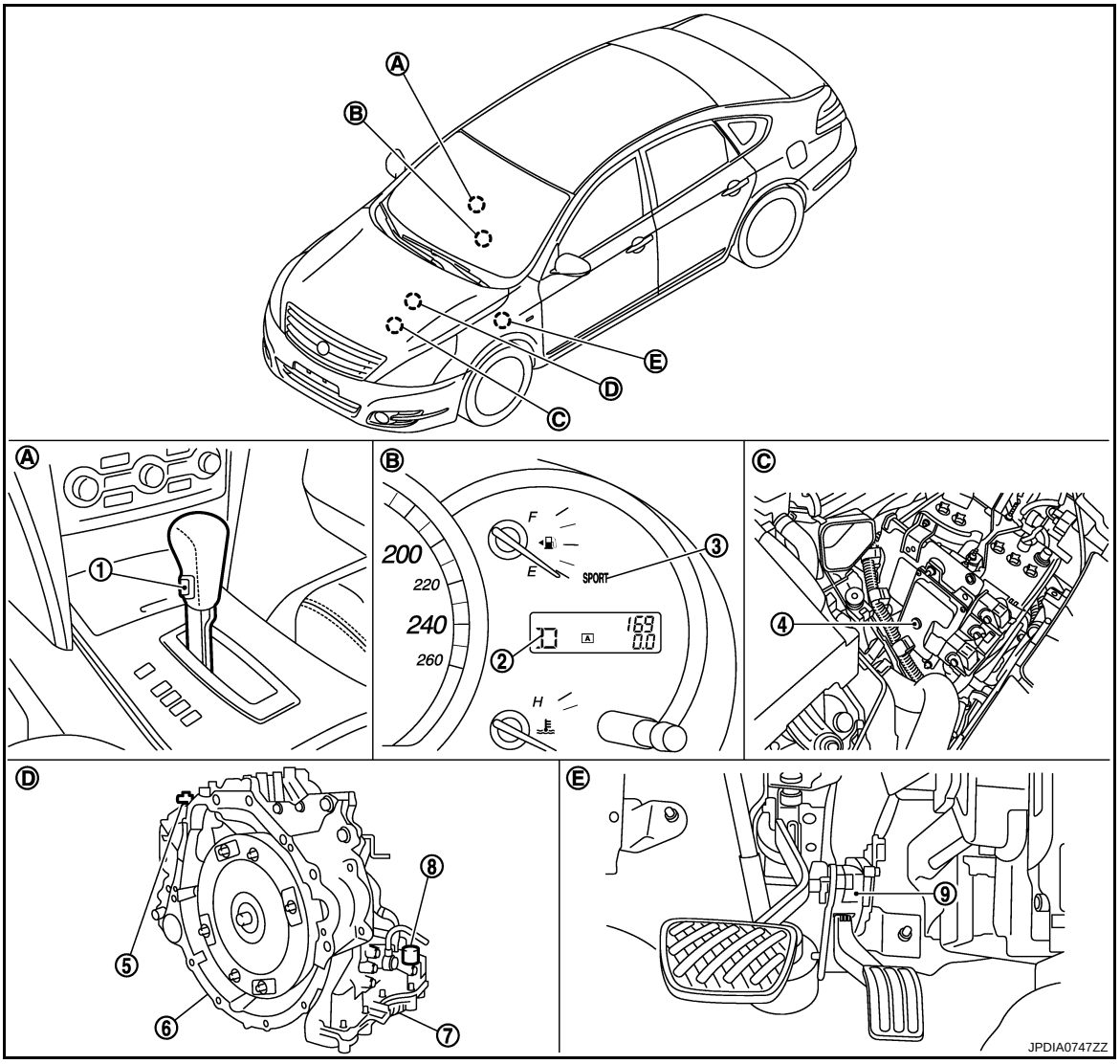

1.	Sport mode switch	2.	Shift position indicator	3.	SPORT indicator lamp
4.	TCM	5.	Secondary speed sensor	6.	Primary pressure sensor*1
7.	Control valve assembly*2	8.	CVT unit connector	9.	Accelerator pedal position sensor
A.	Control device	B.	Combination meter	C.	Engine room LH
D.	CVT assembly	E.	Accelerator pedal, upper		

*1: Primary pressure sensor is included in CVT assembly.

*2: Control valve assembly is included in CVT assembly.

NOTE:

The following components are included in control valve assembly (7).

- PNP switch
- Primary speed sensor
- Step motor
- Secondary pressure solenoid valve
- Line pressure solenoid valve
- Torque converter clutch solenoid valve
- Shift control valve
- Secondary valve
- Manual valve
- Lock-up select solenoid valve

- CVT fluid temperature sensor
- Secondary pressure sensor
- ROM assembly

Component Description

INFOID:0000000003848931

TRANSAXLE ASSEMBLY

Name	Function
PNP switch	TM-47
CVT fluid temperature sensor	TM-50
Primary speed sensor	TM-52
Secondary speed sensor	TM-55
Primary pressure sensor	TM-80
Secondary pressure sensor	TM-74
Step motor	TM-97
TCC solenoid valve	TM-62
Lock-up select solenoid valve	TM-94
Line pressure solenoid valve	TM-66
Secondary pressure solenoid valve	TM-72

EXCEPT TRANSAXLE ASSEMBLY

Name	Function
TCM	TM-22
Stop lamp switch	TM-44

LOCK-UP AND SELECT CONTROL SYSTEM

System Diagram

INFOID:0000000003848932

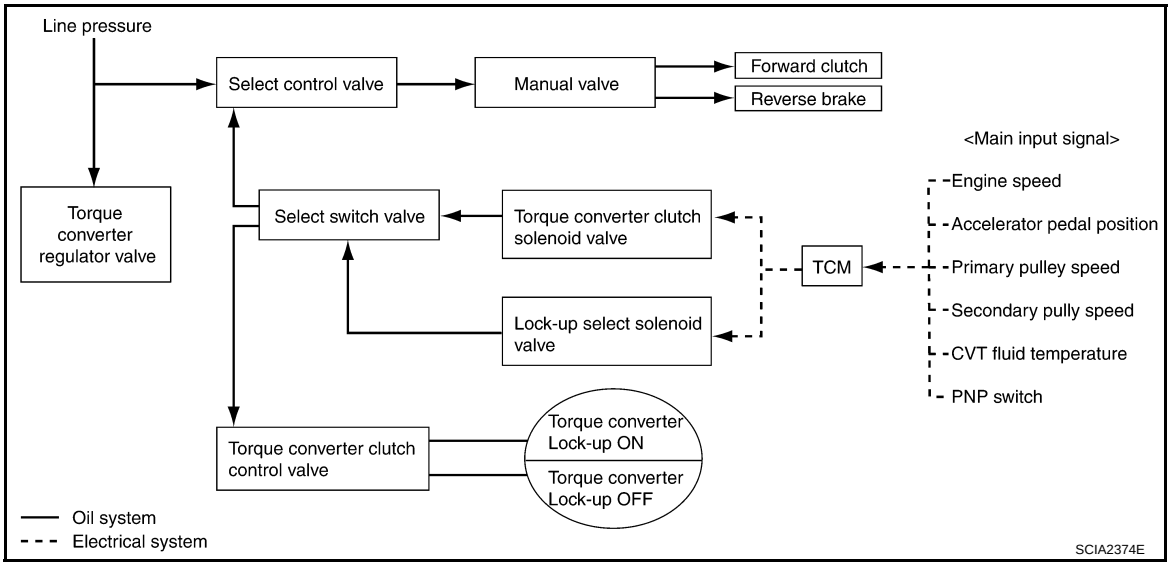

System Description

INFOID:0000000003848933

- The torque converter clutch piston in the torque converter is engaged to eliminate torque converter slip to increase power transmission efficiency.
- The torque converter clutch control valve operation is controlled by the torque converter clutch solenoid valve, which is controlled by a signal from TCM. The torque converter clutch control valve engages or releases the torque converter clutch piston.
- When shifting between “N” (“P”) ⇔“D” (“R”), torque converter clutch solenoid valve controls engagement power of forward clutch and reverse brake.
- The lock-up applied gear range was expanded by locking up the torque converter at a lower vehicle speed than conventional CVT models.

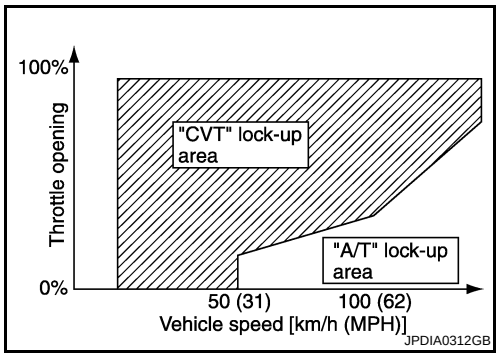

TORQUE CONVERTER CLUTCH AND SELECT CONTROL VALVE CONTROL

Lock-up Released

In the lock-up released state, the torque converter clutch control valve is set into the unlocked state by the torque converter clutch solenoid valve and the lock-up apply pressure is drained.
In this way, the torque converter clutch piston is not coupled.

Lock-up Applied

In the lock-up applied state, the torque converter clutch control valve is set into the locked state by the torque converter clutch solenoid valve and lock-up apply pressure is generated.
In this way, the torque converter clutch piston is pressed and coupled.

Select Control

When shifting between “N” (“P”) ⇔“D” (“R”), optimize the operating pressure on the basis of the throttle position, the engine speed, and the secondary pulley (output) revolution speed to lessen the shift shock.

Component Parts Location

INFOID:0000000003848934

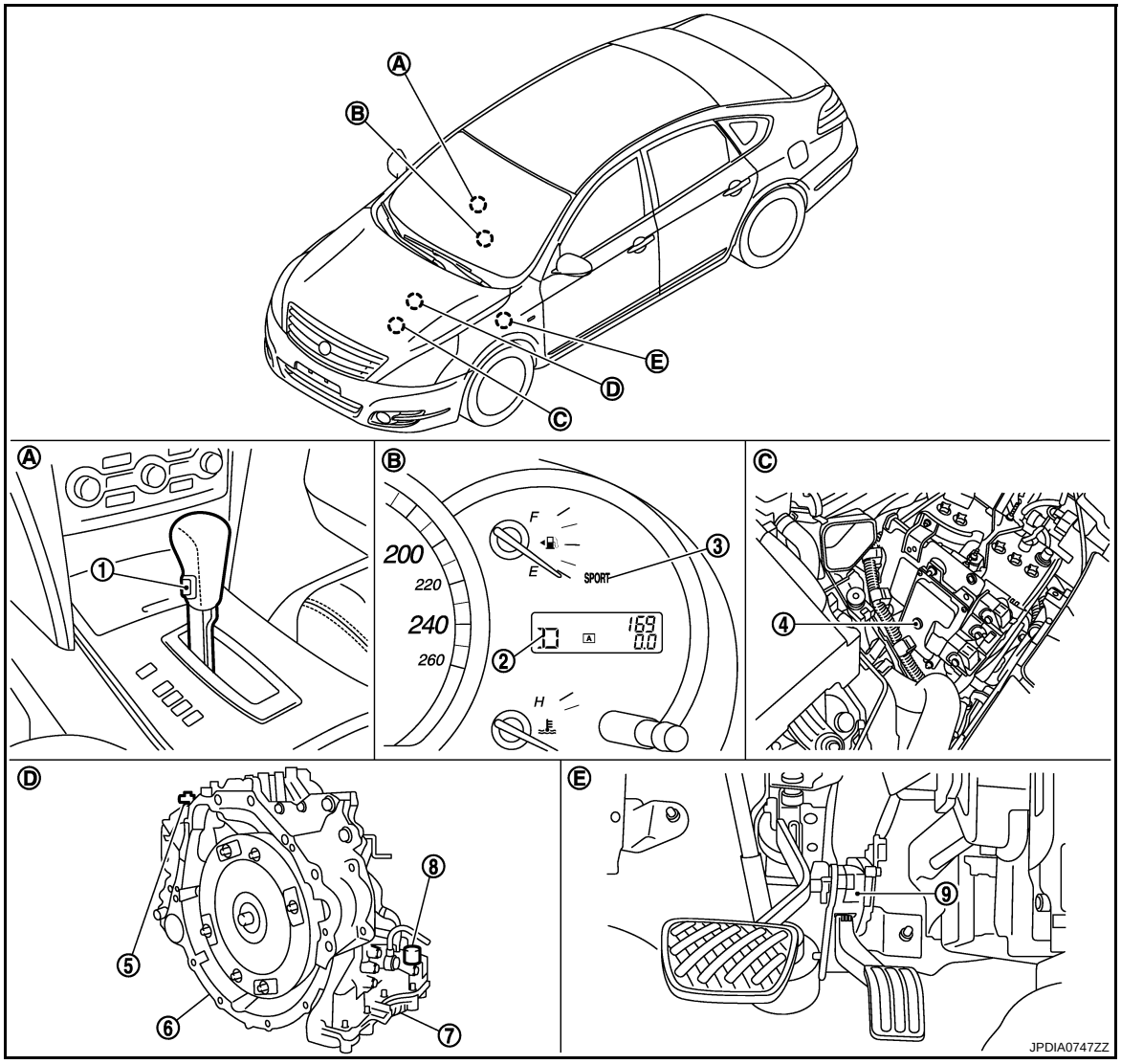

1.	Sport mode switch	2.	Shift position indicator	3.	SPORT indicator lamp
4.	TCM	5.	Secondary speed sensor	6.	Primary pressure sensor*1
7.	Control valve assembly*2	8.	CVT unit connector	9.	Accelerator pedal position sensor
A.	Control device	B.	Combination meter	C.	Engine room LH
D.	CVT assembly	E.	Accelerator pedal, upper		

*1: Primary pressure sensor is included in CVT assembly.

*2: Control valve assembly is included in CVT assembly.

NOTE:

The following components are included in control valve assembly (7).

- PNP switch
- Primary speed sensor
- Step motor
- Secondary pressure solenoid valve
- Line pressure solenoid valve
- Torque converter clutch solenoid valve
- Shift control valve
- Secondary valve
- Manual valve
- Lock-up select solenoid valve

- CVT fluid temperature sensor
- Secondary pressure sensor
- ROM assembly

Component Description

INFOID:0000000003848935

TRANSAXLE ASSEMBLY

Name	Function
Torque converter regulator valve	TM-22
TCC control valve	
Select control valve	
Select switch valve	
Manual valve	
TCC solenoid valve	TM-62
Lock-up select solenoid valve	TM-94
Primary speed sensor	TM-52
Secondary speed sensor	TM-55
CVT fluid temperature sensor	TM-50
PNP switch	TM-47
Forward clutch	TM-19
Reverse brake	
Torque converter	

EXCEPT TRANSAXLE ASSEMBLY

Name	Function
TCM	TM-22
Accelerator pedal position sensor	TM-88

SHIFT CONTROL SYSTEM

System Diagram

INFOID:0000000003848936

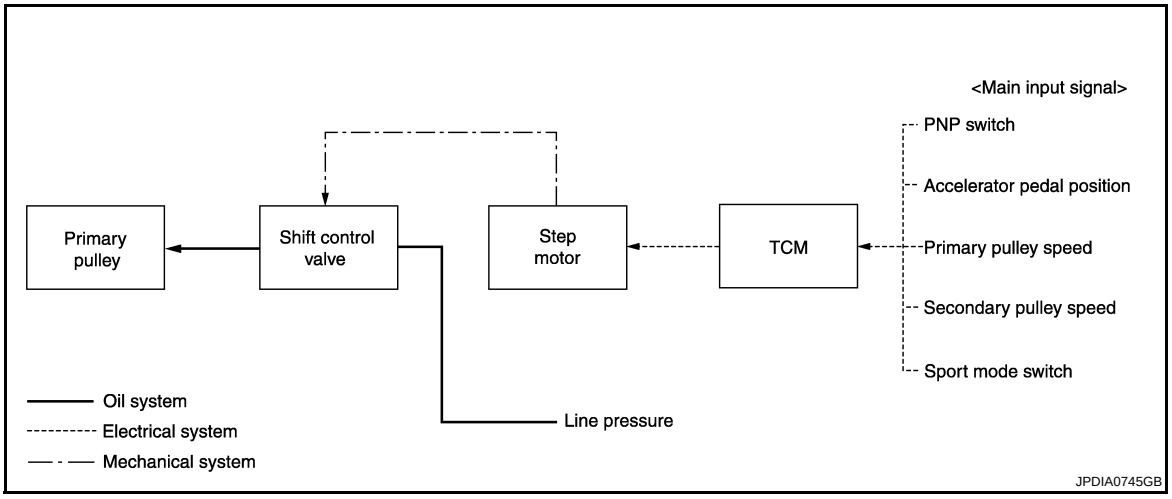

NOTE:
The gear ratio is set for each position separately.

System Description

INFOID:0000000003848937

In order to select the gear ratio that can obtain the driving force in accordance with driver's intention and the vehicle condition, TCM monitors the driving conditions, such as the vehicle speed and the throttle position, selects the optimum gear ratio, and determines the gear change steps to the gear ratio. Then TCM sends the command to the step motor, controls the inflow/outflow of line pressure from the primary pulley to determine the position of the moving-pulley and controls the gear ratio.

“D” POSITION

Shifting over all the ranges of gear ratios from the lowest to the highest.

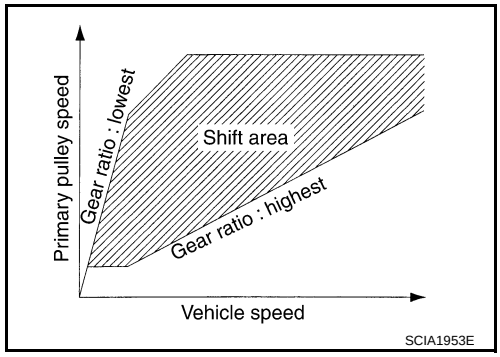

SPORT MODE

Use this position for improved engine braking.

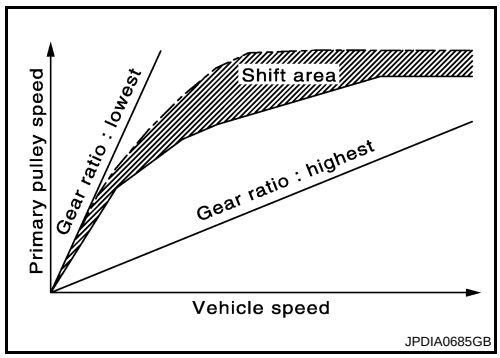

“L” POSITION

By limiting the gear range to the lowest position, the strong driving force and the engine brake can be secured.

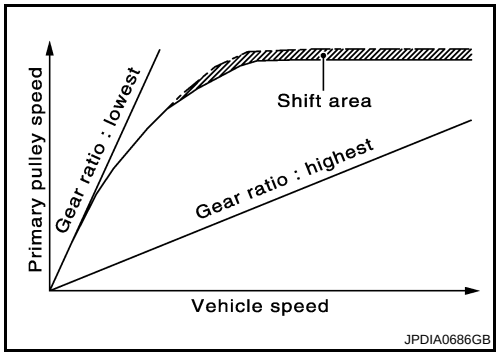

DOWNHILL ENGINE BRAKE CONTROL (AUTO ENGINE BRAKE CONTROL)

When a downhill slope is detected with the accelerator pedal released, the engine brake will be strengthened up by downshifting so as not to accelerate the vehicle more than necessary.

ACCELERATION CONTROL

According to vehicle speed and a change of accelerator pedal angle, driver's request for acceleration and driving scene are judged. This function assists improvement in the acceleration feeling by making the engine speed proportionate to the vehicle speed. And a shift map that can gain a larger driving force is available for compatibility of mileage with driveability.

Component Parts Location

INFOID:0000000003848938

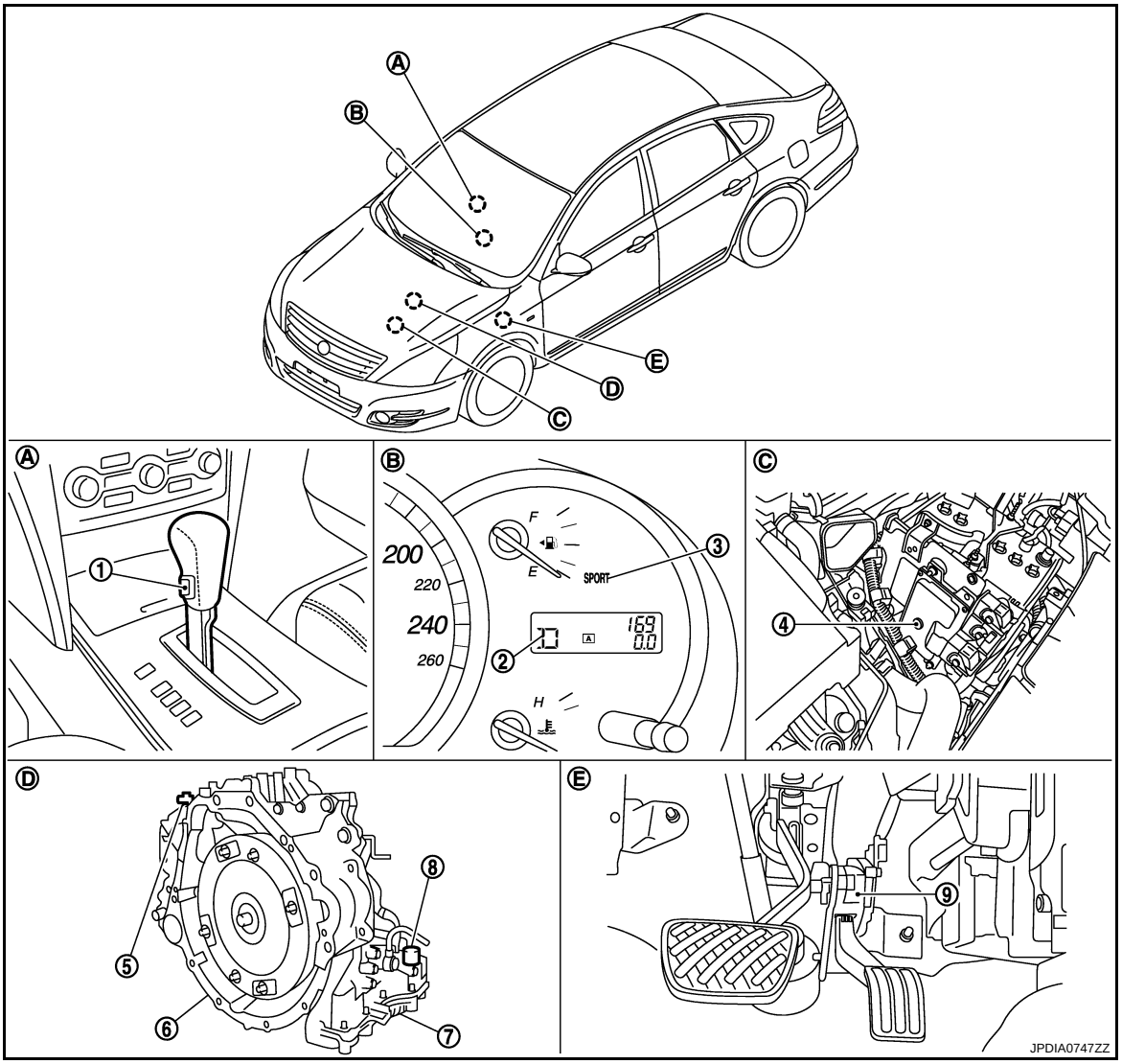

1.	Sport mode switch	2.	Shift position indicator	3.	SPORT indicator lamp
4.	TCM	5.	Secondary speed sensor	6.	Primary pressure sensor*1
7.	Control valve assembly*2	8.	CVT unit connector	9.	Accelerator pedal position sensor
A.	Control device	B.	Combination meter	C.	Engine room LH
D.	CVT assembly	E.	Accelerator pedal, upper		

*1: Primary pressure sensor is included in CVT assembly.

*2: Control valve assembly is included in CVT assembly.

NOTE:

The following components are included in control valve assembly (7).

- PNP switch
- Primary speed sensor
- Step motor
- Secondary pressure solenoid valve
- Line pressure solenoid valve
- Torque converter clutch solenoid valve
- Shift control valve
- Secondary valve
- Manual valve
- Lock-up select solenoid valve
- CVT fluid temperature sensor
- Secondary pressure sensor
- ROM assembly

Component Description

INFOID:0000000003848939

TRANSAXLE ASSEMBLY

Item	Function
PNP switch	TM-47
Primary speed sensor	TM-52
Secondary speed sensor	TM-55
Step motor	TM-97
Shift control valve	TM-22
Primary pulley	TM-19
Secondary pulley	TM-19

EXCEPT TRANSAXLE ASSEMBLY

Item	Function
TCM	TM-22

SHIFT LOCK SYSTEM

System Description

INFOID:0000000003848940

The shift lever cannot be shifted from the “P” position unless the brake pedal is depressed while the ignition switch is set to ON. The shift lock is unlocked by turning the shift lock solenoid ON when the ignition switch is set to ON, the park position switch is turned ON (selector lever is in “P” position), and the stop lamp switch is turned ON (brake pedal is depressed) as shown in the operation chart in the figure. Therefore, the shift lock solenoid receives no ON signal and the shift lock remains locked if all of the above conditions are not fulfilled. (However, selector operation is allowed if the shift lock release button is pressed.)

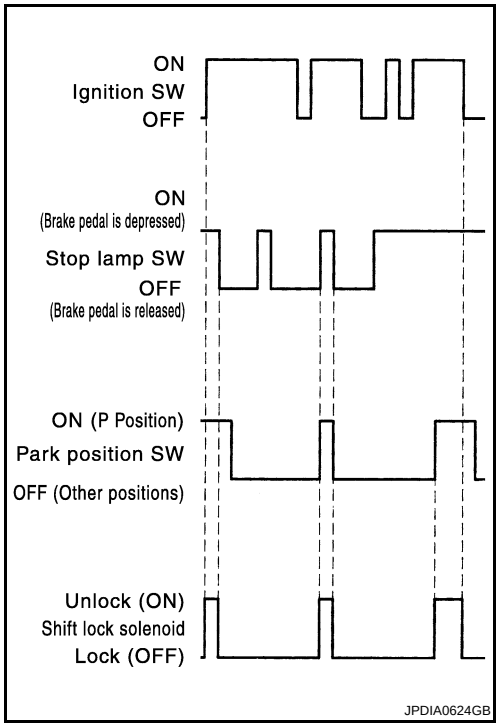

SHIFT LOCK OPERATION at “P” POSITION

When Brake Pedal Is Not Depressed (No Selector Operation Allowed)

The shift lock solenoid (A) is turned OFF (not energized) and the solenoid rod (B) is extended with the spring when the brake pedal is not depressed (no selector operation allowed) with the ignition switch ON.

The connecting lock lever (C) is located at the position shown in the figure when the solenoid rod is extended. It prevents the movement of the detent rod (D). The selector lever cannot be shifted from the “P” position for this reason.

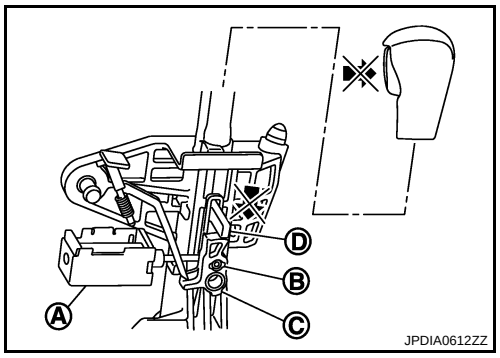

When Brake Pedal Is Depressed (Shift Operation Allowed)

The shift lock solenoid (A) is turned ON (energized) when the brake pedal is depressed with the ignition switch ON. The solenoid rod (B) is compressed by the electromagnetic force. The connecting lock lever (C) rotates when the solenoid is activated. Therefore, the detent rod (D) can be moved. The selector lever can be shifted to other positions for this reason.

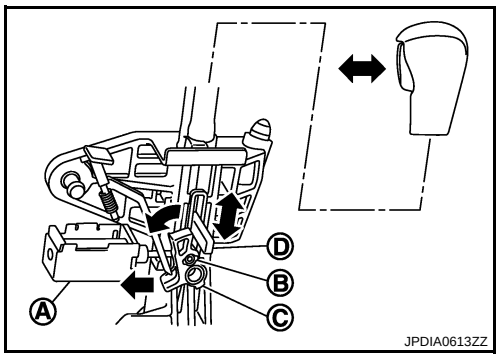

“P” POSITION HOLD MECHANISM (IGNITION SWITCH LOCK)

The shift lock solenoid (A) is not energized when the ignition switch is in any position other than ON. In this condition, the shift mechanism is locked and “P” position is held. The operation cannot be performed from “P” position if the brake pedal is depressed with the ignition switch ON when the operation system of shift lock solenoid is malfunctioning. However, the lock lever (B) is forcibly rotated and the shift lock is released when the shift lock release button (C) is pressed from above. Then the selector operation from “P” position can be performed.

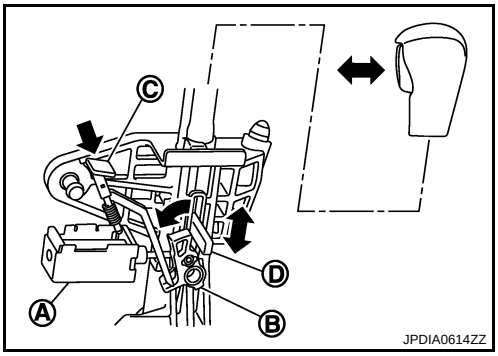

D : Detent rod

CAUTION:
Use the shift lock release button only when the selector lever cannot be operated even if the brake pedal is depressed with the ignition switch ON.

Component Parts Location

INFOID:0000000003848941

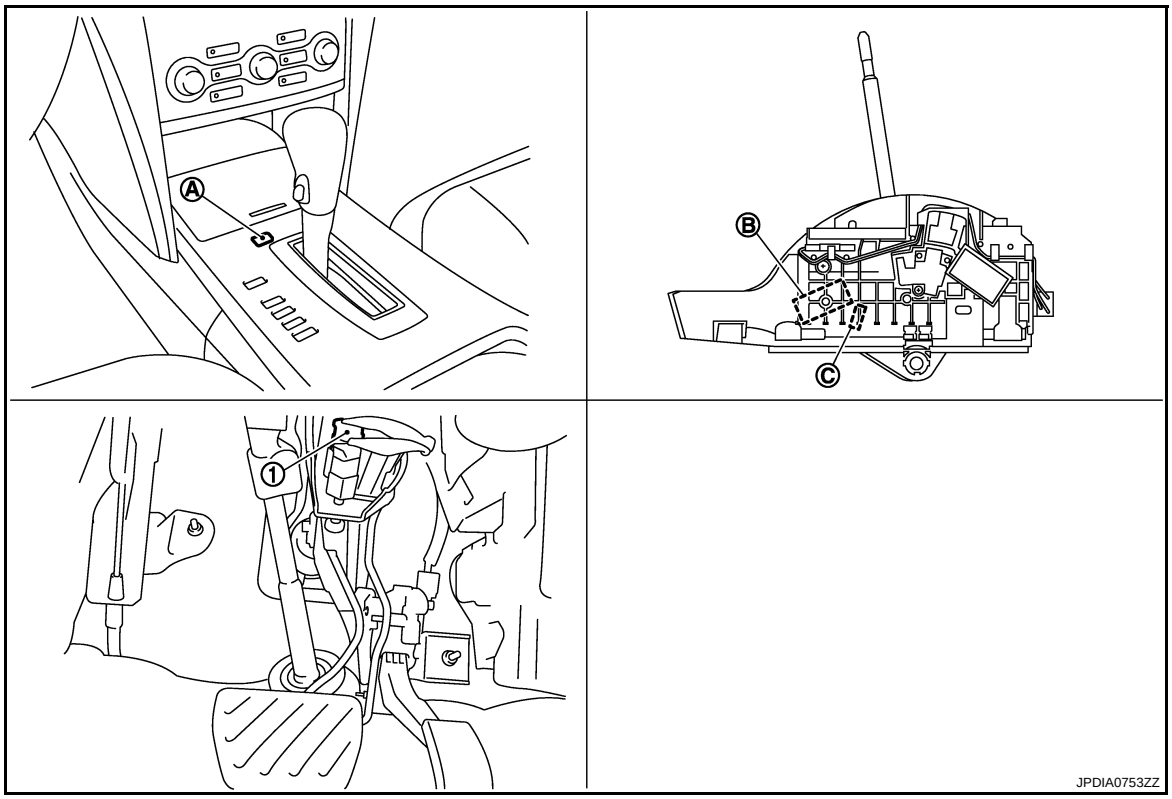

1. Stop lamp switch

A. Shift lock release button B. Shift lock solenoid C. Park position switch

Component Description

INFOID:0000000003848942

SHIFT LOCK

Component	Function
Shift lock solenoid	TM-103
Lock lever	
Detent rod	
Park position switch	
Shift lock release button	

ON BOARD DIAGNOSTIC (OBD) SYSTEM

Diagnosis Description

INFOID:0000000003848943

DESCRIPTION

The CVT system has two self-diagnostic systems.
The first is the emission-related on board diagnostic system (OBD) performed by the TCM in combination with the ECM. A malfunction is indicated by the MI (Malfunction Indicator) and is stored as a DTC in the ECM memory and in the TCM memory.
The second is the TCM original self-diagnosis performed by the TCM. A malfunction history is stored in the TCM memory. The detected items are overlapped with OBD self-diagnostic items. For details, refer to TM-121, "DTC Index".

OBD FUNCTION

The ECM provides emission-related on board diagnostic (OBD) functions for the CVT system. One function is to receive a signal from the TCM used with OBD-related parts of the CVT system. The signal is sent to the ECM when a malfunction occurs in the corresponding OBD-related part. The other function is to indicate a diagnostic result by means of the MI (Malfunction Indicator) on the instrument panel. Sensors, switches and solenoid valves are used as sensing elements.
The MI automatically illuminates in “One or Two Trip Detection Logic” when a malfunction is sensed in relation to CVT system parts.

ONE OR TWO TRIP DETECTION LOGIC OF OBD

One Trip Detection Logic

If a malfunction is sensed during the first test drive, the MI illuminates and the ECM memory stores the malfunction as a DTC. The TCM is not provided with such a memory function.

Two Trip Detection Logic

When a malfunction is sensed during the first test drive, it is stored in the ECM memory as a 1st trip DTC (diagnostic trouble code) or 1st trip freeze frame data. At this point, the MI does not illuminate. — 1st trip
If the same malfunction as that experienced during the first test drive is sensed during the second test drive, the MI will illuminate. — 2nd trip
The “trip” in the “One or Two Trip Detection Logic” means a driving mode in which self-diagnosis is performed during vehicle operation.

OBD DIAGNOSTIC TROUBLE CODE (DTC)

How to Read DTC and 1st Trip DTC

DTC and 1st trip DTC can be read by the following methods.
(with CONSULT-III or GST) CONSULT-III or GST (Generic Scan Tool) Examples: P0705, P0720, etc.
These DTC are prescribed by ISO 15031-6.
(CONSULT-III also displays the malfunctioning component or system.)

- **1st trip DTC No. is the same as DTC No.**
- **Output of the diagnostic trouble code indicates that the indicated circuit has a malfunction. However, in case of the Mode II and GST, they do not indicate whether the malfunction is still occurring or it occurred in the past and has returned to normal.**
  CONSULT-III can identify them as shown below, therefore, CONSULT-III (if available) is recommended.
- DTC or 1st trip DTC of a malfunction is displayed in “Self-Diagnostic Results” mode for “ENGINE” with CONSULT-III. Time data indicates how many times the vehicle was driven after the last detection of a DTC.
- If the DTC is being detected currently, the time data will be “0”.
- If a 1st trip DTC is stored in the ECM, the time data will be “1t”.

Freeze Frame Data and 1st Trip Freeze Frame Data

- The ECM has a memory function, which stores the driving conditions such as fuel system status, calculated load value, engine coolant temperature, short-term fuel trim, long-term fuel trim, engine speed and vehicle speed at the moment the ECM detects a malfunction.
  Data that are stored in the ECM memory, along with the 1st trip DTC, are called 1st trip freeze frame data, and the data, stored together with the DTC data, are called freeze frame data and displayed on CONSULT-III or GST. The 1st trip freeze frame data can only be displayed on the CONSULT-III screen, not on the GST. For details, refer to EC-113, "CONSULT-III Function".

Only one set of freeze frame data (either 1st trip freeze frame data or freeze frame data) can be stored in the ECM. 1st trip freeze frame data is stored in the ECM memory along with the 1st trip DTC. There is no priority for 1st trip freeze frame data, and it is updated each time a different 1st trip DTC is detected. However, once freeze frame data (2nd trip detection/MI on) is stored in the ECM memory, 1st trip freeze frame data is no longer stored. Remember, only one set of freeze frame data can be stored in the ECM. The ECM has the following priorities to update the data.

Priority	Items	
1	Freeze frame data	Misfire — DTC: P0300 - P0306 Fuel Injection System Function — DTC: P0171, P0172, P0174, P0175
2		Except the above items (Includes CVT related items)
3	1st trip freeze frame data	

Both 1st trip freeze frame data and freeze frame data (along with the DTC) are cleared when the ECM memory is erased.

How to Erase DTC

- The diagnostic trouble code can be erased by CONSULT-III, GST or ECM DIAGNOSTIC TEST MODE as described below.
- **If the battery cable is disconnected, the diagnostic trouble code will be lost within 24 hours.**
- **When erasing the DTC, using CONSULT-III or GST is easier and quicker than switching the mode selector on the ECM.**
- The following emission-related diagnostic information is cleared from the ECM memory when erasing DTC related to OBD. For details, refer to EC-389, "DTC Index".
- **Diagnostic trouble codes (DTC)**
- **1st trip diagnostic trouble codes (1st trip DTC)**
- **Freeze frame data**
- **1st trip freeze frame data**
- **System readiness test (SRT) codes**
- **Test values**

How to Erase DTC (With CONSULT-III)

The emission related diagnostic information in the TCM and ECM can be erased by selecting “ALL Erase” in the “Description” of “FINAL CHECK” mode with CONSULT-III.

How to Erase DTC (With GST)

1. If the ignition switch stays ON after repair work, be sure to turn ignition switch OFF once. Wait at least 10 seconds and then turn it ON (engine stopped) again.
2. Select Mode 4 with GST (Generic Scan Tool). For details, refer to EC-113, "CONSULT-III Function".

MALFUNCTION INDICATOR (MI)

Description

The MI is located on the instrument panel.

1. The MI is turned ON when the ignition switch is turned ON without the engine running. This is a bulb check.
   - If the MI is not turned ON, refer to EC-346, "Component Function Check".
2. The MI is turned OFF when the engine is started.
   If the MI remains ON, the on board diagnostic system has detected an engine system malfunction.

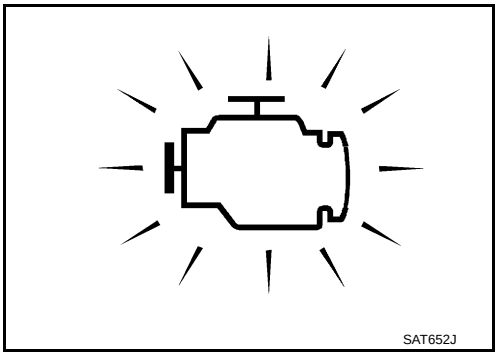

DIAGNOSIS SYSTEM (TCM)

CONSULT-III Function (TRANSMISSION)

INFOID:0000000003848944

FUNCTION

CONSULT-III can display each diagnostic item using the diagnostic test modes shown following.

Diagnostic test mode	Function
Work Support	This mode enables a technician to adjust some devices faster and more accurately.
Self-Diagnostic Results	Retrieve DTC from ECU and display diagnostic items.
Data Monitor	Monitor the input/output signal of the control unit in real time.
CAN Diagnosis	This mode displays a network diagnosis result about CAN by a diagram.
CAN Diagnostic Support Monitor	It monitors the status of CAN communication.
Function Test	This mode can show results of self-diagnosis of ECU with either “OK” or “NG”. For engine, more practical tests regarding sensors/switches and/or actuators are available.
ECU Identification	Display the ECU identification number (part number etc.) of the selected system.
Special Function	Other results or histories, etc. that are recorded in ECU are displayed.

WORK SUPPORT MODE

Display Item List

Item name	Description
ENGINE BRAKE ADJ.	The engine brake level setting can be canceled.
CONFORM CVTF DETERIORTN	The CVT fluid deterioration level can be checked.

Engine Brake Adjustment

“ENGINE BRAKE LEVEL”

0 : Initial set value (Engine brake level control is activated)

OFF : Engine brake level control is deactivated.

CAUTION:

Mode of “+1”“0”“–1”“–2”“OFF” can be selected by touching “UP”or “DOWN” on CONSULT-III screen. However, do not select a mode other than “0” and “OFF”. Selecting “+1” or “–1” or “–2” may cause irregular driveability.

Check CVT Fluid Deterioration Date

“CVTF DETERIORATION DATE”

More than 210000 : It is necessary to change CVT fluid.

Less than 210000 : It is not necessary to change CVT fluid.

CAUTION:

Touch “CLEAR” after changing CVT fluid, and then erase “CVTF DETERIORATION DATE”.

SELF-DIAGNOSTIC RESULT MODE

Display Items List

Refer to TM-121, "DTC Index".

DATA MONITOR MODE

Display Items List

X: Standard, —: Not applicable, ▼: Option

Monitored item (Unit)	Monitor item selection			Remarks
	ECU INPUT SIGNALS	MAIN SIGNALS	SELECTION FROM MENU	
VSP SENSOR (km/h)	X	—	▼	Output speed sensor (secondary speed sensor)
ESTM VSP SIG (km/h)	X	—	▼	—
PRI SPEED SEN (rpm)	X	—	▼	—
ENG SPEED SIG (rpm)	X	—	▼	—
SEC HYDR SEN (V)	X	—	▼	—
PRI HYDR SEN (V)	X	—	▼	—
ATF TEMP SEN (V)	X	—	▼	CVT fluid temperature sensor
VIGN SEN (V)	X	—	▼	—
VEHICLE SPEED (km/h or mph)	—	X	▼	Vehicle speed recognized by the TCM.
PRI SPEED (rpm)	—	X	▼	Primary pulley speed
SEC SPEED (rpm)	—	—	▼	Secondary pulley speed
ENG SPEED (rpm)	—	X	▼	—
SLIP REV (rpm)	—	X	▼	Difference between engine speed and primary pulley speed.
GEAR RATIO	—	X	▼	—
G SPEED (G)	—	—	▼	—
ACC PEDAL OPEN (0.0/8)	X	X	▼	Degree of opening for accelerator recognized by the TCM. For fail-safe operation, the specific value used for control is displayed.
TRQ RTO	—	—	▼	—
SEC PRESS (MPa)	—	X	▼	—
PRI PRESS (MPa)	—	X	▼	—
ATFTEMP COUNT	—	X	▼	Means CVT fluid temperature. Actual oil temperature °C (°F) cannot be checked unless a numeric value is converted. Refer to TM-139.
DSR REV (rpm)	—	—	▼	—
DGEAR RATIO	—	—	▼	—
DSTM STEP (step)	—	—	▼	—
STM STEP (step)	—	X	▼	—
LU PRS (MPa)	—	—	▼	—
LINE PRS (MPa)	—	—	▼	—
TGT SEC PRESS (MPa)	—	—	▼	—
ISOLT1 (A)	—	X	▼	Torque converter clutch solenoid valve output current
ISOLT2 (A)	—	X	▼	Pressure control solenoid valve A (line pressure solenoid valve) output current
ISOLT3 (A)	—	X	▼	Pressure control solenoid valve B (secondary pressure solenoid valve) output current

Monitored item (Unit)	Monitor item selection			Remarks
	ECU INPUT SIGNALS	MAIN SIGNALS	SELECTION FROM MENU	
SOLMON1 (A)	X	X	▼	Torque converter clutch solenoid valve monitor current
SOLMON2 (A)	X	X	▼	Pressure control solenoid valve A (line pressure solenoid valve) monitor current
SOLMON3 (A)	X	X	▼	Pressure control solenoid valve B (secondary pressure solenoid valve) monitor current
INH SW3M (On/Off)	X	—	▼	PNP switch 3 ON-OFF status monitor
INH SW4 (On/Off)	X	—	▼	PNP switch 4 ON-OFF status
INH SW3 (On/Off)	X	—	▼	PNP switch 3 ON-OFF status
INH SW2 (On/Off)	X	—	▼	PNP switch 2 ON-OFF status
INH SW1 (On/Off)	X	—	▼	PNP switch 1 ON-OFF status
BRAKE SW (On/Off)	X	X	▼	Stop lamp switch (signal input via CAN communications)
FULL SW (On/Off)	X	X	▼	Signal input via CAN communications
IDLE SW (On/Off)	X	X	▼	
SPORT MODE SW (On/Off)	X	X	▼	
STRDWNSW (On/Off)	X	—	▼	Not mounted but displayed.
STRUPSW (On/Off)	X	—	▼	
DOWNLVR (On/Off)	X	—	▼	
UPLVR (On/Off)	X	—	▼	
NONMMODE (On/Off)	X	—	▼	
MMODE (On/Off)	X	—	▼	
INDLRNG (On/Off)	—	—	▼	“L” position indicator output
INDDRNG (On/Off)	—	—	▼	“D” position indicator output
INDNRNG (On/Off)	—	—	▼	“N” position indicator output
INDRRNG (On/Off)	—	—	▼	“R” position indicator output
INDPRNG (On/Off)	—	—	▼	“P” position indicator output
CVT LAMP (On/Off)	—	—	▼	—
SPORT MODE IND (On/Off)	—	—	▼	—
MMODE IND (On/Off)	—	—	▼	Not mounted but displayed.
SMCOIL D (On/Off)	—	—	▼	Step motor coil “D” energizing status
SMCOIL C (On/Off)	—	—	▼	Step motor coil “C” energizing status
SMCOIL B (On/Off)	—	—	▼	Step motor coil “B” energizing status
SMCOIL A (On/Off)	—	—	▼	Step motor coil “A” energizing status
LUSEL SOL OUT (On/Off)	—	—	▼	—
REV LAMP (On/Off)	—	X	▼	—
STRTR RLY OUT (On/Off)	—	—	▼	Starter relay

Monitored item (Unit)	Monitor item selection			Remarks
	ECU INPUT SIGNALS	MAIN SIGNALS	SELECTION FROM MENU	
LUSEL SOL MON (On/Off)	—	—	▼	—
STRTR RLY MON (On/Off)	—	—	▼	Starter relay monitor
VDC ON (On/Off)	X	—	▼	—
TCS ON (On/Off)	X	—	▼	—
ABS ON (On/Off)	X	—	▼	—
ACC ON (On/Off)	X	—	▼	Not mounted but displayed.
RANGE	—	X	▼	Indicates position is recognized by TCM. Indicates a specific value required for control when fail-safe function is activated.
M GEAR POS	—	X	▼	Not mounted but displayed.
Voltage (V)	—	—	▼	Displays the value measured by the voltage probe.
Frequency (Hz)	—	—	▼	The value measured by the pulse probe is displayed.
DUTY-HI (high) (%)	—	—	▼	
DUTY-LOW (low) (%)	—	—	▼	
PLS WIDTH-HI (ms)	—	—	▼	
PLS WIDTH-LOW (ms)	—	—	▼	

Diagnostic Tool Function

INFOID:0000000003848945

OBD SELF-DIAGNOSTIC PROCEDURE

Refer to EC-122, "Diagnosis Tool Function".

COMPONENT DIAGNOSIS

U1000 CAN COMM CIRCUIT

Description

INFOID:0000000003848946

CAN (Controller Area Network) is a serial communication line for real time application. It is an on-vehicle multiplex communication line with high data communication speed and excellent malfunction detection ability. Many electronic control units are equipped onto a vehicle, and each control unit shares information and links with other control units during operation (not independent). In CAN communication, control units are connected with 2 communication lines (CAN-H and CAN-L) allowing a high rate of information transmission with less wiring. Each control unit transmits/receives data but selectively reads required data only.

DTC Logic

INFOID:0000000003848947

DTC DETECTION LOGIC

DTC	Item (CONSULT-III screen term)	Malfunction is detected when...	Possible cause
U1000	CAN COMM CIRCUIT	When TCM is not transmitting or receiving CAN communication signal for 2 seconds or more.	Harness or connectors (CAN communication line is open or shorted.)

DTC CONFIRMATION PROCEDURE

NOTE:
Immediately after performing any “DTC CONFIRMATION PROCEDURE”, always turn ignition switch OFF. Then wait at least 10 seconds before performing the next test.

1. CHECK DTC DETECTION

With CONSULT-III
1. Turn ignition switch ON.
2. Start engine and wait for at least 6 seconds.
3. Perform “Self-Diagnostic Results” mode for “TRANSMISSION”.

With GST
Follow the procedure “With CONSULT-III”.

Is “U1000 CAN COMM CIRCUIT” detected?

YES >> Go to TM-41, "Diagnosis Procedure".
NO >> Check intermittent incident. Refer to GI-35, "Intermittent Incident".

Diagnosis Procedure

INFOID:0000000003848948

1. CHECK CAN COMMUNICATION CIRCUIT

With CONSULT-III
1. Turn ignition switch ON and start engine.
2. Perform “Self-Diagnostic Results” mode for “TRANSMISSION”.

Is “U1000 CAN COMM CIRCUIT” indicated?

YES >> Go to LAN section. Refer to LAN-22, "CAN System Specification Chart".
NO >> Check intermittent incident. Refer to GI-35, "Intermittent Incident".

P0615 START SIGNAL

Description

INFOID:0000000003848949

- TCM controls starter relay in IPDM E/R.
- TCM switches starter relay ON at “P” or “N” position and allows to crank engine.
- Then it prohibits cranking other than at “P” or “N” position.

DTC Logic

INFOID:0000000003848950

DTC DETECTION LOGIC

DTC	Item (CONSULT-III screen term)	Malfunction is detected when...	Possible cause
P0615	STARTER RELAY/CIRC	If this signal is ON other than in “P” or “N” position, this is judged to be a malfunction. (And if it is OFF in “P” or “N” position, this too is judged to be a malfunction.)	• Harness or connectors (Starter relay and TCM circuit is open or shorted.) • Starter relay circuit

DTC CONFIRMATION PROCEDURE

CAUTION:
Always drive vehicle at a safe speed.
NOTE:
Immediately after performing any “DTC CONFIRMATION PROCEDURE”, always turn ignition switch OFF. Then wait at least 10 seconds before performing the next test.

1. CHECK DTC DETECTION

With CONSULT-III
1. Turn ignition switch ON.
2. Perform “Self-Diagnostic Results” mode for “TRANSMISSION”.

Is “P0615 STARTER RELAY/CIRC” detected?

YES >> Go to TM-42, "Diagnosis Procedure".
NO >> Check intermittent incident. Refer to GI-35, "Intermittent Incident".

Diagnosis Procedure

INFOID:0000000003848951

1. CHECK STARTER RELAY SIGNAL

1. Turn ignition switch ON.
2. Disconnect IPDM E/R harness connector.
3. Check voltage between IPDM E/R vehicle side harness connector terminal and ground.

IPDM E/R vehicle side harness connector		Ground	Condition	Voltage (Approx.)
Connector	Terminal			
F12	72		Selector lever in “P” and “N” positions	Battery voltage
			Selector lever in other positions	0 V

Is the inspection result normal?

YES >> Check starter relay and starter control relay. Refer to STR-10, "Wiring Diagram - STARTING SYSTEM -".
NO >> GO TO 2.

2. CHECK HARNESS BETWEEN TCM AND IPDM E/R (PART 1)

1. Turn ignition switch OFF.
2. Disconnect TCM connector.
3. Check continuity between TCM vehicle side harness connector terminal and IPDM E/R vehicle side harness connector terminal.

TCM vehicle side harness connector		IPDM E/R vehicle side harness connector		Continuity
Connector	Terminal	Connector	Terminal	
F23	20	F12	72	Existed

Is the inspection result normal?

YES >> GO TO 3.
NO >> Repair or replace damaged parts.

3. CHECK HARNESS BETWEEN TCM AND IPDM E/R (PART 2)

Check continuity between TCM vehicle side harness connector terminal and ground.

TCM vehicle side harness connector		Ground	Continuity
Connector	Terminal		
F23	20		Not existed

Is the inspection result normal?

YES >> GO TO 4.
NO >> Repair or replace damaged parts.

4. DETECT MALFUNCTIONING ITEMS

Check TCM connector pin terminals for damage or loose connection with harness connector.

Is the inspection result normal?

YES >> Replace TCM. Refer to TM-153, "Exploded View".
NO >> Repair or replace damaged parts.

P0703 STOP LAMP SWITCH

Description

INFOID:0000000003848952

BCM detects ON/OFF state of the stop lamp switch and transmits the data to the TCM via CAN communication by converting the data to a signal.

DTC Logic

INFOID:0000000003848953

DTC DETECTION LOGIC

DTC	Item (CONSULT-III screen term)	Malfunction is detected when...	Possible cause
P0703	BRAKE SW/CIRC	When the brake switch does not switch to ON or OFF.	• Harness or connectors - (Stop lamp switch, and BCM circuit are open or shorted.) - (CAN communication line is open or shorted.) • Stop lamp switch

DTC CONFIRMATION PROCEDURE

CAUTION:

Always drive vehicle at a safe speed.

NOTE:

Immediately after performing any “DTC CONFIRMATION PROCEDURE”, always turn ignition switch OFF. Then wait at least 10 seconds before performing the next test.

1. CHECK DTC DETECTION

With CONSULT-III

1. Turn ignition switch ON.
2. Start engine.
3. Drive vehicle for at least 3 consecutive seconds.
4. Perform “Self-Diagnostic Results” mode for “TRANSMISSION”.

Is “P0703 BRAKE SW/CIRC” detected?

YES >> Go to TM-44, "Diagnosis Procedure".
NO >> Check intermittent incident. Refer to GI-35, "Intermittent Incident".

Diagnosis Procedure

INFOID:0000000003848954

1. CHECK STOP LAMP SWITCH CIRCUIT

1. Check and adjust the installation position of stop lamp switch. Refer to BR-6, "Inspection and Adjustment".
2. Disconnect BCM connector.
3. Check voltage between BCM vehicle side harness connector terminal and ground.

BCM vehicle side harness connector		Ground	Condition	Voltage (Approx.)
Connector	Terminal			
M123	118		Depressed brake pedal	Battery voltage
			Released brake pedal	0 V

Is the inspection result normal?

YES >> GO TO 5.
NO >> GO TO 2.

2. CHECK HARNESS BETWEEN STOP LAMP SWITCH AND BCM (PART 1)

1. Disconnect stop lamp switch connector.
2. Check continuity between stop lamp switch vehicle side harness connector terminal and BCM vehicle side harness connector terminal.

Stop lamp switch vehicle side harness connector		BCM vehicle side harness connector		Continuity
Connector	Terminal	Connector	Terminal	
E115	2	M123	118	Existed

Is the inspection result normal?

YES >> GO TO 3.
NO >> Repair or replace damaged parts.

3. CHECK HARNESS BETWEEN STOP LAMP SWITCH AND BCM (PART 2)

Check continuity between BCM vehicle side harness connector terminal and ground.

BCM vehicle side harness connector		Ground	Continuity
Connector	Terminal		
M123	118		Not existed

Is the inspection result normal?

YES >> GO TO 4.
NO >> Repair or replace damaged parts.

4. CHECK STOP LAMP SWITCH

Check stop lamp switch. Refer to TM-45, "Component Inspection (Stop Lamp Switch)".

Is the inspection result normal?

YES >> Check the following.
- Harness for short or open between battery and stop lamp switch
- 10A fuse (No. 7, located in fuse block)

NO >> Repair or replace stop lamp switch.

5. CHECK BCM

With CONSULT-III

1. Turn ignition switch OFF.
2. Connect BCM connector.
3. Turn ignition switch ON.
4. Select “BRAKE SW 1” in “Data Monitor” of “BCM” and verify the proper operation of ON/OFF. Refer to BCS-42, "Reference Value".

Is the inspection result normal?

YES >> GO TO 6.
NO >> Replace BCM. Refer to BCS-78, "Removal and Installation".

6. DETECT MALFUNCTIONING ITEMS

Check TCM connector pin terminals for damage or loose connection with harness connector.

Is the inspection result normal?

YES >> Replace TCM. Refer to TM-153, "Exploded View".
NO >> Repair or replace damaged parts.

Component Inspection (Stop Lamp Switch)

INFOID:0000000003848955

1. CHECK STOP LAMP SWITCH

Check continuity between stop lamp switch connector terminals.

Stop lamp switch connector terminal			Condition	Continuity
Connector	Terminal			
E115	1	2	Depressed brake pedal	Existed
			Released brake pedal	Not existed

Is the inspection result normal?

YES >> INSPECTION END

NO >> Replace stop lamp switch. Refer to BR-17, "Exploded View".

P0705 PARK/NEUTRAL POSITION SWITCH

Description

INFOID:0000000003848956

- The PNP switch is included in the control valve assembly.
- The PNP switch includes 4 transmission position switches.
- TCM judges the selector lever position by the PNP switch signal.

Shift position	PNP switch 1	PNP switch 2	PNP switch 3	PNP switch 4	PNP switch 3 (monitor)
P	OFF	OFF	OFF	OFF	OFF
R	ON	OFF	OFF	ON	OFF
N	ON	ON	OFF	OFF	OFF
D	ON	ON	ON	ON	ON
L	OFF	ON	ON	OFF	ON

DTC Logic

INFOID:0000000003848957

DTC DETECTION LOGIC

DTC	Item (CONSULT-III screen term)	Malfunction is detected when...	Possible cause
P0705	PNP SW/CIRC	TCM does not receive the correct voltage signal (based on the gear position) from the switch.	• Harness or connectors (PNP switches circuit is open or shorted.) • PNP switch

DTC CONFIRMATION PROCEDURE

CAUTION:

Always drive vehicle at a safe speed.

NOTE:

Immediately after performing any “DTC CONFIRMATION PROCEDURE”, always turn ignition switch OFF. Then wait at least 10 seconds before performing the next test.

1. CHECK DTC DETECTION

With CONSULT-III

1. Turn ignition switch ON.
2. Select “Data Monitor” mode for “TRANSMISSION”.
3. Start engine.
4. Drive vehicle and maintain the following conditions for at least 2 consecutive seconds.

VEHICLE SPEED	More than 10 km/h (6 MPH)
ENG SPEED SIG	: More than 450 rpm
ACC PEDAL OPEN	: More than 1.0/8

With GST

Follow the procedure “With CONSULT-III”.

Is “P0705 PNP SW/CIRC” detected?

YES >> Go to TM-47, "Diagnosis Procedure".
NO >> Check intermittent incident. Refer to GI-35, "Intermittent Incident".

Diagnosis Procedure

INFOID:0000000003848958

1. CHECK CVT POSITION

1. Disconnect CVT unit connector.
2. Remove control cable from manual lever. Refer toTM-157, "Exploded View".
3. Check PNP switch. Refer to TM-48, "Component Inspection".

Is the inspection result normal?

YES >> Adjust CVT position. Refer to TM-152, "Inspection and Adjustment".

NO >> GO TO 2.

2. CHECK HARNESS BETWEEN TCM AND PNP SWITCH (PART 1)

1. Turn ignition switch OFF.
2. Disconnect TCM connector.
3. Check continuity between TCM vehicle side harness connector terminals and CVT unit vehicle side harness connector terminals.

TCM vehicle side harness connector		CVT unit vehicle side harness connector		Continuity
Connector	Terminal	Connector	Terminal	
F23	1	F24	5	Existed
	2		14	
	3		15	
	4		18	
	11		4	

Is the inspection result normal?

YES >> GO TO 3.
NO >> Repair or replace damaged parts.

3. CHECK HARNESS BETWEEN TCM AND PNP SWITCH (PART 2)

Check continuity between TCM vehicle side harness connector terminals and ground.

TCM vehicle side harness connector			Continuity
Connector	Terminal		
F23	1	Ground	Not existed
	2		
	3		
	4		
	11		

Is the inspection result normal?

YES >> GO TO 4.
NO >> Repair or replace damaged parts.

4. DETECT MALFUNCTIONING ITEMS

Check TCM connector pin terminals for damage or loose connection with harness connector.

Is the inspection result normal?

YES >> Replace TCM. Refer to TM-153, "Exploded View".
NO >> Repair or replace damaged parts.

Component Inspection

INFOID:0000000003848959

1. CHECK PNP SWITCH

Check the continuity of the PNP switch by changing selector lever to various positions and checking continuity between CVT unit terminals and ground.

Shift position	CVT unit connector			Continuity
	Connector	Terminal		
P	F24	4, 5, 14, 15, 18	Ground	Not existed
R		4, 15		Existed
		5, 14, 18		Not existed
N		4, 5		Existed
		14, 15, 18		Not existed
D		4, 5, 14, 15, 18		Existed
L		5, 14, 18		Existed
		4, 15		Not existed

Is the inspection result normal?

YES >> INSPECTION END

NO >> Replace transaxle assembly. Refer to TM-168, "Exploded View".

P0710 CVT FLUID TEMPERATURE SENSOR

Description

INFOID:0000000003848960

The CVT fluid temperature sensor detects the CVT fluid temperature and sends the signal to the TCM.

DTC Logic

INFOID:0000000003848961

DTC DETECTION LOGIC

DTC	Item (CONSULT-III screen term)	Malfunction is detected when...	Possible cause
P0710	ATF TEMP SEN/CIRC	During running, the CVT fluid temperature sensor signal voltage is excessively high or low.	• Harness or connectors (Sensor circuit is open or shorted.) • CVT fluid temperature sensor

DTC CONFIRMATION PROCEDURE

CAUTION:

Always drive vehicle at a safe speed.

NOTE:

Immediately after performing any “DTC CONFIRMATION PROCEDURE”, always turn ignition switch OFF. Then wait at least 10 seconds before performing the next test.

1. CHECK DTC DETECTION

With CONSULT-III

1. Turn ignition switch ON.
2. Select “Data Monitor” mode for “TRANSMISSION”.
3. Start engine and maintain the following conditions for at least 10 minutes (total).

VEHICLE SPEED	: 10 km/h (6 MPH) or more
ENG SPEED	: 450 rpm or more
ACC PEDAL OPEN	: More than 1.0/8
RANGE	: “D” position

With GST

Follow the procedure “With CONSULT-III”.

Is “P0710 ATF TEMP SEN/CIRC” detected?

YES >> Go to TM-50, "Diagnosis Procedure".
NO >> Check intermittent incident. Refer to GI-35, "Intermittent Incident".

Diagnosis Procedure

INFOID:0000000003848962

1. CHECK CVT FLUID TEMPERATURE SENSOR CIRCUIT

1. Turn ignition switch OFF.
2. Disconnect TCM connector.
3. Check resistance between TCM vehicle side harness connector terminals.

TCM vehicle side harness connector			condition	Resistance (Approx.)
Connector	Terminal			
F23	13	25	When CVT fluid temperature is 20°C (68°F)	6.5 kΩ
			When CVT fluid temperature is 80° (176°F)	0.9 kΩ

Is the inspection result normal?

YES >> GO TO 5.
NO >> GO TO 2.

2. CHECK HARNESS BETWEEN TCM AND CVT UNIT (CVT TEMPERATURE SENSOR) (PART 1)

1. Disconnect CVT unit connector.

2. Check continuity between TCM vehicle side harness connector terminals and CVT unit vehicle side harness connector terminals.

TCM vehicle side harness connector		CVT unit vehicle side harness connector		Continuity
Connector	Terminal	Connector	Terminal	
F23	13	F24	17	Existed
	25		19	

Is the inspection result normal?

YES >> GO TO 3.
NO >> Repair or replace damaged parts.

3. CHECK HARNESS BETWEEN TCM AND CVT UNIT (CVT TEMPERATURE SENSOR) (PART 2)

Check continuity between TCM vehicle side harness connector terminals and ground.

TCM vehicle side harness connector		Ground	Continuity
Connector	Terminal		
F23	13		Not existed
	25		

Is the inspection result normal?

YES >> GO TO 4.
NO >> Repair or replace damaged parts.

4. CHECK CVT FLUID TEMPERATURE SENSOR

Check CVT fluid temperature sensor. Refer to TM-51, "Component Inspection (CVT Fluid Temperature Sensor)".

Is the inspection result normal?

YES >> GO TO 5.
NO >> Replace transaxle assembly. Refer to TM-168, "Exploded View".

5. DETECT MALFUNCTIONING ITEMS

Check TCM connector pin terminals for damage or loose connection with harness connector.

Is the inspection result normal?

YES >> Replace TCM. Refer to TM-153, "Exploded View".
NO >> Repair or replace damaged parts.

Component Inspection (CVT Fluid Temperature Sensor)

INFOID:0000000003848963

1. CHECK CVT FLUID TEMPERATURE SENSOR

Check resistance between CVT unit connector terminals.

CVT unit connector			Condition	Resistance (Approx.)
Connector	terminal			
F24	17	19	When CVT fluid temperature is 20°C (68°F)	6.5 kΩ
			When CVT fluid temperature is 80°C (176°F)	0.9 kΩ

Is the inspection result normal?

YES >> INSPECTION END
NO >> Replace transaxle assembly. Refer to TM-168, "Exploded View".

P0715 INPUT SPEED SENSOR (PRI SPEED SENSOR)

Description

INFOID:0000000003848964

The input speed sensor (primary speed sensor) detects the primary pulley revolution speed and sends the signal to the TCM.

DTC Logic

INFOID:0000000003848965

DTC DETECTION LOGIC

DTC	Item (CONSULT-III screen term)	Malfunction is detected when...	Possible cause
P0715	INPUT SPD SEN/CIRC	• Input speed sensor (primary speed sensor) signal is not input due to an open circuit. • An unexpected signal is input when vehicle is being driven.	• Harness or connectors (Sensor circuit is open or shorted.) • Input speed sensor (primary speed sensor)

DTC CONFIRMATION PROCEDURE

CAUTION:

Always drive vehicle at a safe speed.

NOTE:

Immediately after performing any “DTC CONFIRMATION PROCEDURE”, always turn ignition switch OFF. Then wait at least 10 seconds before performing the next test.

1. CHECK DTC DETECTION

With CONSULT-III

1. Turn ignition switch ON.
2. Select “Data Monitor” mode for “TRANSMISSION”.
3. Start engine and maintain the following conditions for at least 5 consecutive seconds.

VEHICLE SPEED	: 10 km/h (6 MPH) or more
ACC PEDAL OPEN	: More than 1.0/8
RANGE	: “D” position
ENG SPEED	: 450 rpm or more
Driving location	: Driving the vehicle uphill (increased engine load) will help maintain the driving conditions required for this test.

With GST

Follow the procedure “With CONSULT-III”.

Is “P0715 INPUT SPD SEN/CIRC” detected?

YES >> Go to TM-52, "Diagnosis Procedure".
NO >> Check intermittent incident. Refer to GI-35, "Intermittent Incident".

Diagnosis Procedure

INFOID:0000000003848966

1. CHECK INPUT SPEED SENSOR (PRIMARY SPEED SENSOR)

1. Start engine.
2. Check voltage between TCM connector terminals.

TCM connector			Voltage (Approx.)
Connector	Terminal		
	(+)	(-)	
F23	26	25	4.75 - 5.25 V

3. If OK, check the pulse when vehicle drive.

TCM connector		Condition	Data (Approx.)
Connector	Terminal		
F23	33	When driving at 20 km/h (12 MPH) in “L” position, use the CONSULT-III pulse frequency measuring function.	680 Hz

Is the inspection result normal?

YES >> GO TO 7.
NO - 1 >> Battery voltage is not supplied: GO TO 2.
NO - 2 >> Battery voltage is supplied, but there is a malfunction in the frequency: GO TO 4.

2. CHECK HARNESS BETWEEN TCM AND CVT UNIT HARNESS CONNECTOR (SENSOR POWER AND SENSOR GROUND) (PART 1)

1. Turn ignition switch OFF.
2. Disconnect TCM connector and CVT unit connector.
3. Check continuity between TCM vehicle side harness connector terminals and CVT unit vehicle side harness connector terminals.

TCM vehicle side harness connector		CVT unit vehicle side harness connector		Continuity
Connector	Terminal	Connector	Terminal	
F23	25	F24	19	Existed
	26		20	Existed

Is the inspection result normal?

YES >> GO TO 3.
NO >> Repair or replace damaged parts.

3. CHECK HARNESS BETWEEN TCM AND CVT UNIT HARNESS CONNECTOR (SENSOR POWER AND SENSOR GROUND) (PART 2)

Check continuity between TCM vehicle side harness connector terminals and ground.

TCM vehicle side harness connector		Ground	Continuity
Connector	Terminal		
F23	25		Not existed
	26		

Is the inspection result normal?

YES >> GO TO 6.
NO >> Repair or replace damaged parts.

4. CHECK HARNESS BETWEEN TCM AND CVT UNIT HARNESS CONNECTOR [INPUT SPEED SENSOR (PRIMARY SPEED SENSOR)] (PART 1)

1. Turn ignition switch OFF.
2. Check continuity between TCM vehicle side harness connector terminal and CVT unit vehicle side harness connector terminal.

TCM vehicle side harness connector		CVT unit vehicle side harness connector		Continuity
Connector	Terminal	Connector	Terminal	
F23	33	F24	22	Existed

Is the inspection result normal?

YES >> GO TO 5.
NO >> Repair or replace damaged parts.

5. CHECK HARNESS BETWEEN TCM AND CVT UNIT HARNESS CONNECTOR [INPUT SPEED SENSOR (PRIMARY SPEED SENSOR)] (PART 2)

Check continuity between TCM vehicle side harness connector terminal and ground.

TCM vehicle side harness connector		Ground	Continuity
Connector	Terminal		
F23	33		Not existed

Is the inspection result normal?

YES >> GO TO 6.
NO >> Repair or replace damaged parts.

6. CHECK THE TCM SHORT

1. Replace with the same type of TCM. Refer to TM-153, "Exploded View".
2. Connect each connectors.
3. Perform “DTC CONFIRMATION PROCEDURE”. Refer to TM-52, "DTC Logic".

Is the “P0715 INPUT SPD SEN/CIRC” detected again?

YES >> GO TO 7.
NO >> Check intermittent incident. Refer to GI-35, "Intermittent Incident".

7. DETECT MALFUNCTIONING ITEMS

Check TCM connector pin terminals for damage or loose connection with harness connector.

Is the inspection result normal?

YES >> Replace TCM. Refer to TM-153, "Exploded View".
NO >> Repair or replace damaged parts.

P0720 VEHICLE SPEED SENSOR CVT (SECONDARY SPEED SENSOR)

Description

INFOID:0000000003848967

The vehicle speed sensor CVT [output speed sensor (secondary speed sensor)] detects the revolution of the CVT output shaft and emits a pulse signal. The pulse signal is transmitted to the TCM, which converts it into vehicle speed.

DTC Logic

INFOID:0000000003848968

DTC DETECTION LOGIC

DTC	Item (CONSULT-III screen term)	Malfunction is detected when...	Possible cause
P0720	VEH SPD SEN/CIR AT	• Signal from vehicle speed sensor CVT [output speed sensor (secondary speed sensor)] is not input due to open or short circuit. • An unexpected signal is input during running.	• Harness or connectors (Sensor circuit is open or shorted.) • Output speed sensor (secondary speed sensor)

DTC CONFIRMATION PROCEDURE

CAUTION:

Always drive vehicle at a safe speed.

NOTE:

Immediately after performing any “DTC CONFIRMATION PROCEDURE”, always turn ignition switch OFF. Then wait at least 10 seconds before performing the next test.

1. CHECK DTC DETECTION

With CONSULT-III

1. Turn ignition switch ON.
2. Select “Data Monitor” mode for “TRANSMISSION”.
3. Start engine and maintain the following conditions for at least 12 consecutive seconds.

ACC PEDAL OPEN	: More than 1.0/8
RANGE	: “D” position
Driving location	: Driving the vehicle uphill (increased engine load) will help maintain the driving conditions required for this test.

With GST

Follow the procedure “With CONSULT-III”.

Is “P0720 VEH SPD SEN/CIR AT” detected?

YES >> Go to TM-55, "Diagnosis Procedure".

NO >> Check intermittent incident. Refer to GI-35, "Intermittent Incident".

Diagnosis Procedure

INFOID:0000000003890671

1. CHECK OUTPUT SPEED SENSOR (SECONDARY SPEED SENSOR)

With CONSULT-III

1. Start engine.
2. Check voltage between TCM connector terminals.

TCM connector			Voltage (Approx.)
Connector	Terminal		
	(+)	(–)	
F23	46	7	Battery voltage
	48		

3. If OK, check pulse when vehicle drive.

TCM connector		Condition	Data (Approx.)
Connector	Terminal		
F23	34	When driving at 20 km/h (12 MPH) in “D” position, use the CONSULT-III pulse frequency measuring function.	400 Hz

Is the inspection result normal?

YES >> GO TO 11.
NO >> GO TO 2.

2. CHECK POWER AND SENSOR GROUND

1. Turn ignition switch OFF.
2. Disconnect output speed sensor (secondary speed sensor) connector.
3. Turn ignition switch ON.
4. Check voltage between output speed sensor (secondary speed sensor) vehicle side harness connector terminals.

Output speed sensor (secondary speed sensor) vehicle side harness connector			Voltage (Approx.)
Connector	Terminal		
	(+)	(–)	
F19	3	1	Battery voltage

5. Check voltage between output speed sensor (secondary speed sensor) vehicle side harness connector terminal and ground.

Output speed sensor (secondary speed sensor) vehicle side harness connector		Ground	Voltage (Approx.)
Connector	Terminal		
F19	3		Battery voltage

Is the inspection result normal?

YES >> GO TO 3.
NO-1 (Battery voltage is not supplied between terminals 1 and 3, and between terminal 3 and ground)>>GO TO 6.
NO-2 (Battery voltage is not supplied between terminals 1 and 3 only)>>GO TO 8.

3. CHECK HARNESS BETWEEN TCM AND OUTPUT SPEED SENSOR (SECONDARY SPEED SENSOR) (SENSOR GROUND)

1. Turn ignition switch OFF.
2. Disconnect TCM connector.
3. Check continuity between TCM vehicle side harness connector terminal and ground.

TCM vehicle side harness connector		Ground	Continuity
Connector	Terminal		
F23	7		Not existed

Is the inspection result normal?

YES >> GO TO 4.
NO >> Repair or replace damaged parts.

4. CHECK HARNESS BETWEEN TCM AND OUTPUT SPEED SENSOR (SECONDARY SPEED SENSOR) (PART 1)

Check continuity between TCM vehicle side harness connector terminal and output speed sensor (secondary speed sensor) vehicle side harness connector terminal.

TCM vehicle side harness connector		Output speed sensor (secondary speed sensor) vehicle side harness connector		Continuity
Connector	Terminal	Connector	Terminal	
F23	34	F19	2	Existed

Is the inspection result normal?

YES >> GO TO 5.
NO >> Repair or replace damaged parts.

5. CHECK HARNESS BETWEEN TCM AND OUTPUT SPEED SENSOR (SECONDARY SPEED SENSOR) (PART 2)

Check continuity between TCM vehicle side harness connector terminal and ground.

TCM vehicle side harness connector		Ground	Continuity
Connector	Terminal		
F23	34		Not existed

Is the inspection result normal?

YES >> GO TO 10.
NO >> Repair or replace damaged parts.

6. CHECK HARNESS BETWEEN IPDM E/R AND OUTPUT SPEED SENSOR (SECONDARY SPEED SENSOR) (POWER) (PART 1)

1. Turn ignition switch OFF.
2. Disconnect IPDM E/R connector.
3. Check continuity between IPDM E/R vehicle side harness connector terminal and output speed sensor (secondary speed sensor) vehicle side harness connector terminal.

IPDM E/R vehicle side harness connector		Output speed sensor (secondary speed sensor) vehicle side harness connector		Continuity
Connector	Terminal	Connector	Terminal	
F12	58	F19	3	Existed

Is the inspection result normal?

YES >> GO TO 7.
NO >> Repair or replace damaged parts.

7. CHECK HARNESS BETWEEN IPDM E/R AND OUTPUT SPEED SENSOR (SECONDARY SPEED SENSOR) (POWER) (PART 2)

Check continuity between IPDM E/R vehicle side harness connector terminal and ground.

IPDM E/R vehicle side harness connector		Ground	Continuity
Connector	Terminal		
F12	58		Not existed

Is the inspection result normal?

YES >> Check the following.
- Harness for short or open between ignition switch and IPDM E/R
- 10 A fuse (No. 43, located in IPDM E/R)
- Ignition switch

NO >> Repair or replace damaged parts.

8. CHECK HARNESS BETWEEN TCM AND OUTPUT SPEED SENSOR (SECONDARY SPEED SENSOR) (SENSOR GROUND) (PART 1)

1. Turn ignition switch OFF.
2. Disconnect TCM connector.
3. Check continuity between TCM vehicle side harness connector terminal and output speed sensor (secondary speed sensor) vehicle side harness connector terminal.

TCM vehicle side harness connector		Output speed sensor (secondary speed sensor) vehicle side harness connector		Continuity
Connector	Terminal	Connector	Terminal	
F23	7	F19	1	Existed

Is the inspection result normal?

YES >> GO TO 9.
NO >> Repair or replace damaged parts.

9. CHECK HARNESS BETWEEN TCM AND OUTPUT SPEED SENSOR (SECONDARY SPEED SENSOR) (SENSOR GROUND) (PART 2)

Check continuity between TCM vehicle side harness connector terminal and ground.

TCM vehicle side harness connector		Ground	Continuity
Connector	Terminal		
F23	7		Not existed

Is the inspection result normal?

YES >> GO TO 10.
NO >> Repair or replace damaged parts.

10. CHECK TCM

1. Replace with the same type of TCM. Refer to TM-153, "Exploded View".
2. Connect each connector.
3. Perform “DTC CONFIRMATION PROCEDURE”. Refer to TM-55, "DTC Logic".

Is “P0720 VEH SPD SEN/CIR AT” detected?

YES >> Replace output speed sensor (secondary speed sensor). Refer to TM-161, "Exploded View".
NO >> Replace TCM. Refer to TM-153, "Exploded View".

11. DETECT MALFUNCTIONING ITEMS

Check TCM connector pin terminals for damage or loose connection with harness connector.

Is the inspection result normal?

YES >> Replace TCM. Refer to TM-153, "Exploded View".
NO >> Repair or replace damaged parts.

P0725 ENGINE SPEED SIGNAL

Description

INFOID:0000000003848970

The engine speed signal is transmitted from ECM to TCM via CAN communication line.

DTC Logic

INFOID:0000000003848971

DTC DETECTION LOGIC

DTC	Item (CONSULT-III screen term)	Malfunction is detected when...	Possible cause
P0725	ENGINE SPEED SIG	• TCM does not receive the CAN communication signal from the ECM. • Engine speed is too low while driving.	Harness or connectors (The ECM to the TCM circuit is open or shorted.)

DTC CONFIRMATION PROCEDURE

CAUTION:

Always drive vehicle at a safe speed.

NOTE:

Immediately after performing any “DTC CONFIRMATION PROCEDURE”, always turn ignition switch OFF. Then wait at least 10 seconds before performing the next test.

1. CHECK DTC DETECTION

With CONSULT-III

1. Turn ignition switch ON.
2. Select “Data Monitor” mode for “TRANSMISSION”.
3. Start engine and maintain the following conditions for at least 10 consecutive seconds.

PRI SPEED SEN : More than 1,000 rpm

Is “P0725 ENGINE SPEED SIG” detected?

YES >> Go to TM-59, "Diagnosis Procedure".
NO >> Check intermittent incident. Refer to GI-35, "Intermittent Incident".

Diagnosis Procedure

INFOID:0000000003848972

1. CHECK DTC WITH ECM

With CONSULT-III

1. Turn ignition switch ON.
2. Perform “Self-Diagnostic Results” mode for “ENGINE”.

Is the inspection result normal?

YES >> GO TO 2.
NO >> Check DTC detected item. Refer to EC-389, "DTC Index".

2. CHECK DTC WITH TCM

With CONSULT-III

Perform “Self-Diagnostic Results” mode for “TRANSMISSION”.

Is “P0725 ENGINE SPEED SIG” detected?

YES >> Replace TCM. Refer to TM-153, "Exploded View".
NO >> GO TO 3.

3. DETECT MALFUNCTIONING ITEMS

Check TCM connector pin terminals for damage or loose connection with harness connector.

Is the inspection result normal?

YES >> Replace TCM. Refer to TM-153, "Exploded View".
NO >> Repair or replace damaged parts.

P0730 BELT DAMAGE

Description

INFOID:0000000003848973

TCM selects the gear ratio using the engine load (throttle position), the primary pulley revolution speed, and the secondary pulley revolution speed as input signals. Then it changes the operating pressure of the primary pulley and the secondary pulley and changes the groove width of the pulley.

DTC Logic

INFOID:0000000003848974

DTC DETECTION LOGIC

DTC	Item (CONSULT-III screen term)	Malfunction is detected when...	Possible cause
P0730	BELT DAMG	Unexpected gear ratio detected.	Transaxle assembly

DTC CONFIRMATION PROCEDURE

CAUTION:
Always drive vehicle at a safe speed.
NOTE:
Immediately after performing any “DTC CONFIRMATION PROCEDURE”, always turn ignition switch OFF. Then wait at least 10 seconds before performing the next test.

1. CHECK DTC DETECTION

With CONSULT-III

1. Turn ignition switch ON.
2. Select “Data Monitor” mode for “TRANSMISSION”.
3. Make sure that output voltage of CVT fluid temperature sensor is within the range below.

ATF TEMP SEN	: 1.0 – 2.0 V

If it is out of range, drive the vehicle to decrease the voltage (warm up the fluid) or stop engine to increase the voltage (cool down the fluid)

4. Start engine and maintain the following conditions for at least 30 consecutive seconds.

Start test from 0 km/h (0 MPH)	
Constant acceleration	: Keep 30 sec or more
VEHICLE SPEED	: 10 km/h (6 MPH) or more
ACC PEDAL OPEN	: More than 1.0/8
RANGE	: “D” position
ENG SPEED	: 450 rpm or more

Is “P0730 BELT DAMG” detected?

YES >> Go to TM-60, "Diagnosis Procedure".
NO >> Check intermittent incident. Refer to GI-35, "Intermittent Incident".

Diagnosis Procedure

INFOID:0000000003848975

1. CHECK DTC

With CONSULT-III

1. Turn ignition switch ON.
2. Perform “Self-Diagnostic Results” mode for “TRANSMISSION”.

Are any DTC detected?

YES-1 (DTC for “P0730 BELT DAMG” is detected)>>Replace transaxle assembly. Refer to TM-168, "Exploded View".
YES-2 (DTC except for “P0730 BELT DAMG” is detected)>>Check DTC detected item. Refer to TM-37, "CONSULT-III Function (TRANSMISSION)".
NO >> GO TO 2.

2. DETECT MALFUNCTIONING ITEMS

Check TCM connector pin terminals for damage or loose connection with harness connector.

Is the inspection result normal?

YES >> Replace TCM. Refer to TM-153, "Exploded View".
NO >> Repair or replace damaged parts.

P0740 TORQUE CONVERTER CLUTCH SOLENOID VALVE

Description

INFOID:0000000003848976

- The torque converter clutch solenoid valve is activated by the TCM in response to signals sent from the vehicle speed and accelerator pedal position sensors. Lock-up piston operation will then be controlled.
- Lock-up operation, however, is prohibited when CVT fluid temperature is too low.
- When the accelerator pedal is depressed (less than 2.0/8) in lock-up condition, the engine speed shall not change abruptly. If there is a big jump in engine speed, there is no lock-up.

DTC Logic

INFOID:0000000003848977

DTC DETECTION LOGIC

DTC	Item (CONSULT-III screen term)	Malfunction is detected when...	Possible cause
P0740	TCC SOLENOID/CIRC	Normal voltage is not applied to solenoid due to open or short circuit.	• Torque converter clutch solenoid valve • Harness or connectors (Solenoid circuit is open or shorted.)

DTC CONFIRMATION PROCEDURE

NOTE:
Immediately after performing any “DTC CONFIRMATION PROCEDURE”, always turn ignition switch OFF. Then wait at least 10 seconds before performing the next test.

1. CHECK DTC DETECTION

With CONSULT-III
1. Turn ignition switch ON.
2. Wait at least 10 consecutive seconds.
3. Perform “Self-Diagnostic Results” mode for “TRANSMISSION”.

With GST
Follow the procedure “With CONSULT-III”.

Is “P0740 TCC SOLENOID/CIRC” detected?

YES >> Go to TM-62, "Diagnosis Procedure".
NO >> Check intermittent incident. Refer to GI-35, "Intermittent Incident".

Diagnosis Procedure

INFOID:0000000003848978

1. CHECK TORQUE CONVERTER CLUTCH SOLENOID VALVE CIRCUIT

1. Turn ignition switch OFF.
2. Disconnect TCM connector.
3. Check resistance between TCM vehicle side harness connector terminal and ground.

TCM vehicle side harness connector		Ground	Resistance (Approx.)
Connector	Terminal		
F23	38		3.0 – 9.0 Ω

Is the inspection result normal?

YES >> GO TO 5.
NO >> GO TO 2.

2. CHECK HARNESS BETWEEN TCM AND CVT UNIT (TORQUE CONVERTER CLUTCH SOLENOID VALVE) (PART 1)

1. Disconnect CVT unit connector.
2. Check continuity between TCM vehicle side harness connector terminal and CVT unit vehicle side harness connector terminal.

TCM vehicle side harness connector		CVT unit vehicle side harness connector		Continuity
Connector	Terminal	Connector	Terminal	
F23	38	F24	12	Existed

Is the inspection result normal?

YES >> GO TO 3.
NO >> Repair or replace damaged parts.

3. CHECK HARNESS BETWEEN TCM AND CVT UNIT (TORQUE CONVERTER CLUTCH SOLENOID VALVE) (PART 2)

Check continuity between TCM vehicle side harness connector terminal and ground.

TCM vehicle side harness connector		Ground	Continuity
Connector	Terminal		
F23	38		Not existed

Is the inspection result normal?

YES >> GO TO 4.
NO >> Repair or replace damaged parts.

4. CHECK TORQUE CONVERTER CLUTCH SOLENOID VALVE

Check torque converter clutch solenoid valve. Refer to TM-63, "Component Inspection (Torque Converter Clutch Solenoid Valve)".

Is the inspection result normal?

YES >> GO TO 5.
NO >> Replace transaxle assembly. Refer to TM-168, "Exploded View".

5. DETECT MALFUNCTIONING ITEMS

Check TCM connector pin terminals for damage or loose connection with harness connector.

Is the inspection result normal?

YES >> Replace TCM. Refer to TM-153, "Exploded View".
NO >> Repair or replace damaged parts.

Component Inspection (Torque Converter Clutch Solenoid Valve)

INFOID:0000000003848979

1. CHECK TORQUE CONVERTER CLUTCH SOLENOID VALVE

Check resistance between CVT unit connector terminal and ground.

CVT unit connector		Ground	Resistance (Approx.)
Connector	Terminal		
F24	12		3.0 – 9.0 Ω

Is the inspection result normal?

YES >> INSPECTION END
NO >> Replace transaxle assembly. Refer to TM-168, "Exploded View".

P0744 A/T TCC S/V FUNCTION (LOCK -UP)

Description

INFOID:0000000003848980

This malfunction is detected when the torque converter clutch does not lock-up as instructed by the TCM. This is not only caused by electrical malfunctions (circuits open or shorted), but also by mechanical malfunctions such as control valve sticking, improper solenoid valve operation, etc.

DTC Logic

INFOID:0000000003848981

DTC DETECTION LOGIC

DTC	Item (CONSULT-III screen term)	Malfunction is detected when...	Possible cause
P0744	A/T TCC S/V FNCTN	• CVT cannot perform lock-up even if electrical circuit is good. • TCM detects as irregular by comparing reference value with slip rotation. • There is a big difference between engine speed and primary speed sensor when TCM lock-up signal is on.	• Torque converter clutch solenoid valve • Hydraulic control circuit

DTC CONFIRMATION PROCEDURE

CAUTION:
Always drive vehicle at a safe speed.
NOTE:
Immediately after performing any “DTC CONFIRMATION PROCEDURE”, always turn ignition switch OFF. Then wait at least 10 seconds before performing the next test.

1. CHECK DTC DETECTION

With CONSULT-III

1. Turn ignition switch ON.
2. Select “Data Monitor” mode for “TRANSMISSION”.
3. Start engine and maintain the following condition for at least 30 seconds.

ACC PEDAL OPEN	: More than 1.0/8
RANGE	: “D” position
VEHICLE SPEED	: Constant speed of more than 40 km/h (25 MPH)

With GST

Follow the procedure “With CONSULT-III”.

Is “P0744 A/T TCC S/V FNCTN” detected?

YES >> Go to TM-64, "Diagnosis Procedure".
NO >> Check intermittent incident. Refer to GI-35, "Intermittent Incident".

Diagnosis Procedure

INFOID:0000000003848982

1. CHECK LINE PRESSURE

Perform line pressure test. Refer to TM-146, "Inspection and Judgment".

Is the inspection result normal?

YES >> GO TO 2.
NO >> Repair or replace damaged parts. Refer to TM-146, "Inspection and Judgment".

2. CHECK TORQUE CONVERTER CLUTCH SOLENOID VALVE

1. Turn ignition switch OFF.
2. Disconnect CVT unit connector.
3. Check torque converter clutch solenoid valve. Refer to TM-65, "Component Inspection (Torque Converter Clutch Solenoid Valve)".

Is the inspection result normal?

YES >> GO TO 3.
NO >> Replace transaxle assembly. Refer to TM-168, "Exploded View".

3. CHECK LOCK-UP SELECT SOLENOID VALVE

Check lock-up select solenoid valve. Refer to TM-65, "Component Inspection (Lock-up Select Solenoid Valve)".

Is the inspection result normal?

YES >> GO TO 4.
NO >> Replace transaxle assembly. Refer to TM-168, "Exploded View".

4. CHECK OUTPUT SPEED SENSOR (SECONDARY SPEED SENSOR) SYSTEM

Check output speed sensor (secondary speed sensor) system. Refer to TM-55, "DTC Logic".

Is the inspection result normal?

YES >> GO TO 5.
NO >> Repair or replace damaged parts.

5. CHECK INPUT SPEED SENSOR (PRIMARY SPEED SENSOR) SYSTEM

Check input speed sensor (primary speed sensor) system. Refer to TM-52, "DTC Logic".

Is the inspection result normal?

YES >> GO TO 6.
NO >> Repair or replace damaged parts.

6. DETECT MALFUNCTIONING ITEMS

Check TCM connector pin terminals for damage or loose connection with harness connector.

Is the inspection result normal?

YES >> Replace TCM. Refer to TM-153, "Exploded View".
NO >> Repair or replace damaged parts.

Component Inspection (Torque Converter Clutch Solenoid Valve)

INFOID:0000000003848983

1. CHECK TORQUE CONVERTER CLUTCH SOLENOID VALVE

Check resistance between CVT unit connector terminal and ground.

CVT unit connector		Ground	Resistance (Approx.)
Connector	Terminal		
F24	12		3.0 – 9.0 Ω

Is the inspection result normal?

YES >> INSPECTION END
NO >> Replace transaxle assembly. Refer to TM-168, "Exploded View".

Component Inspection (Lock-up Select Solenoid Valve)

INFOID:0000000003848984

1. CHECK LOCK-UP SELECT SOLENOID VALVE

Check resistance between CVT unit connector terminal and ground.

CVT unit connector		Ground	Resistance (Approx.)
Connector	Terminal		
F24	13		6.0 – 19.0 Ω

Is the inspection result normal?

YES >> INSPECTION END
NO >> Replace transaxle assembly. Refer to TM-168, "Exploded View".

P0745 LINE PRESSURE SOLENOID VALVE

Description

INFOID:0000000003848985

The pressure control solenoid valve A (line pressure solenoid valve) regulates the oil pump discharge pressure to suit the driving condition in response to the signal sent from the TCM.

DTC Logic

INFOID:0000000003848986

DTC DETECTION LOGIC

DTC	Item (CONSULT-III screen term)	Malfunction is detected when...	Possible cause
P0745	L/PRESS SOL/CIRC	• Normal voltage is not applied to solenoid due to open or short circuit. • TCM detects as irregular by comparing target value with monitor value.	• Harness or connectors (Solenoid circuit is open or shorted.) • Pressure control solenoid valve A (line pressure solenoid valve)

DTC CONFIRMATION PROCEDURE

NOTE:
Immediately after performing any “DTC CONFIRMATION PROCEDURE”, always turn ignition switch OFF. Then wait at least 10 seconds before performing the next test.

1. CHECK DTC DETECTION

With CONSULT-III
1. Turn ignition switch ON.
2. Start engine and wait at least 5 seconds.
3. Perform “Self-Diagnostic Results” mode for “TRANSMISSION”.

With GST
Follow the procedure “With CONSULT-III”.

Is “P0745 L/PRESS SOL/CIRC” detected?

YES >> Go to TM-66, "Diagnosis Procedure".
NO >> Check intermittent incident. Refer to GI-35, "Intermittent Incident".

Diagnosis Procedure

INFOID:0000000003848987

1. CHECK PRESSURE CONTROL SOLENOID VALVE A (LINE PRESSURE SOLENOID VALVE) CIRCUIT

1. Turn ignition switch OFF.
2. Disconnect TCM connector.
3. Check resistance between TCM vehicle side harness connector terminal and ground.

TCM vehicle side harness connector		Ground	Resistance (Approx.)
Connector	Terminal		
F23	40		3.0 – 9.0 Ω

Is the inspection result normal?

YES >> GO TO 5.
NO >> GO TO 2.

2. CHECK HARNESS BETWEEN TCM AND CVT UNIT [PRESSURE CONTROL SOLENOID VALVE A (LINE PRESSURE SOLENOID VALVE)] (PART 1)

1. Disconnect CVT unit connector.
2. Check continuity between TCM vehicle side harness connector terminal and CVT unit vehicle side harness connector terminal.

TCM vehicle side harness connector		CVT unit vehicle side harness connector		Continuity
Connector	Terminal	Connector	Terminal	
F23	40	F24	2	Existed

Is the inspection result normal?

YES >> GO TO 3.
NO >> Repair or replace damaged parts.

3. CHECK HARNESS BETWEEN TCM AND CVT UNIT [PRESSURE CONTROL SOLENOID VALVE A (LINE PRESSURE SOLENOID VALVE)] (PART 2)

Check continuity between TCM vehicle side harness connector terminal and ground.

TCM vehicle side harness connector		Ground	Continuity
Connector	Terminal		
F23	40		Not existed

Is the inspection result normal?

YES >> GO TO 4.
NO >> Repair or replace damaged parts.

4. CHECK PRESSURE CONTROL SOLENOID VALVE A (LINE PRESSURE SOLENOID VALVE)

Check pressure control solenoid valve A (line pressure solenoid valve). Refer to TM-67, "Component Inspection [Pressure Control Solenoid Valve A (Line Pressure Solenoid Valve)]"

Is the inspection result normal?

YES >> GO TO 5.
NO >> Replace transaxle assembly. Refer to TM-168, "Exploded View".

5. DETECT MALFUNCTIONING ITEMS

Check TCM connector pin terminals for damage or loose connection with harness connector.

Is the inspection result normal?

YES >> Replace TCM. Refer to TM-153, "Exploded View".
NO >> Repair or replace damaged parts.

Component Inspection [Pressure Control Solenoid Valve A (Line Pressure Solenoid Valve)]

INFOID:0000000003848988

1. CHECK PRESSURE CONTROL SOLENOID VALVE A (LINE PRESSURE SOLENOID VALVE)

Check resistance between CVT unit connector terminal and ground.

CVT unit connector		Ground	Resistance (Approx.)
Connector	Terminal		
F24	2		3.0 – 9.0 Ω

Is the inspection result normal?

YES >> INSPECTION END
NO >> Replace transaxle assembly. Refer to TM-168, "Exploded View".

P0746 PRESSURE CONTROL SOLENOID A PERFORMANCE (LINE PRESSURE SOLENOID VALVE)

Description

INFOID:0000000003848989

The pressure control solenoid valve A (line pressure solenoid valve) regulates the oil pump discharge pressure to suit the driving condition in response to the signal sent from the TCM.

DTC Logic

INFOID:0000000003848990

DTC DETECTION LOGIC

DTC	Item (CONSULT-III screen term)	Malfunction is detected when...	Possible cause
P0746	PRS CNT SOL/A FCTN	Unexpected gear ratio was detected in the low side due to excessively low line pressure.	• Line pressure control system • Output speed sensor (secondary speed sensor) • Input speed sensor (primary speed sensor)

DTC CONFIRMATION PROCEDURE

CAUTION:
Always drive vehicle at a safe speed.
NOTE:
Immediately after performing any “DTC CONFIRMATION PROCEDURE”, always turn ignition switch OFF. Then wait at least 10 seconds before performing the next test.

1. CHECK DTC DETECTION

With CONSULT-III

1. Turn ignition switch ON.
2. Select “Data Monitor” mode for “TRANSMISSION”.
3. Start engine and maintain the following conditions for at least 10 consecutive seconds. Test start from 0 km/h (0 MPH).

ATF TEMP SEN	: 1.0 – 2.0 V
ACC PEDAL OPEN	: More than 1.0/8
RANGE	: “D” position
VEHICLE SPEED	: 10 km/h (6 MPH) or more
Driving location	: Driving the vehicle uphill (increased engine load) will help maintain the driving conditions required for this test.

With GST

Follow the procedure “With CONSULT-III”.

Is “P0746 PRS CNT SOL/A FCTN” detected?

YES >> Go to TM-68, "Diagnosis Procedure".
NO >> Check intermittent incident. Refer to GI-35, "Intermittent Incident".

Diagnosis Procedure

INFOID:0000000003848991

1. CHECK LINE PRESSURE

Perform line pressure test. Refer to TM-146, "Inspection and Judgment".

Is the inspection result normal?

YES >> GO TO 2.
NO >> Repair or replace damaged parts. Refer to TM-146, "Inspection and Judgment".

2. CHECK PRESSURE CONTROL SOLENOID VALVE A (LINE PRESSURE SOLENOID VALVE)

1. Turn ignition switch OFF.
2. Disconnect CVT unit connector.

3. Check pressure control solenoid valve A (line pressure solenoid valve). Refer to TM-69, "Component Inspection [Pressure Control Solenoid Valve A (Line Pressure Solenoid Valve)]".

Is the inspection result normal?

YES >> GO TO 3.
NO >> Replace transaxle assembly. Refer to TM-168, "Exploded View".

3. CHECK OUTPUT SPEED SENSOR (SECONDARY SPEED SENSOR) SYSTEM

Check output speed sensor (secondary speed sensor) system. Refer to TM-55, "DTC Logic".

Is the inspection result normal?

YES >> GO TO 4.
NO >> Repair or replace damaged parts.

4. CHECK INPUT SPEED SENSOR (PRIMARY SPEED SENSOR) SYSTEM

Check input speed sensor (primary speed sensor) system. Refer to TM-52, "DTC Logic".

Is the inspection result normal?

YES >> GO TO 5.
NO >> Repair or replace damaged parts.

5. DETECT MALFUNCTIONING ITEMS

Check TCM connector pin terminals for damage or loose connection with harness connector.

Is the inspection result normal?

YES >> Replace TCM. Refer to TM-153, "Exploded View".
NO >> Repair or replace damaged parts.

Component Inspection [Pressure Control Solenoid Valve A (Line Pressure Solenoid Valve)]

INFOID:0000000003848992

1. CHECK PRESSURE CONTROL SOLENOID VALVE A (LINE PRESSURE SOLENOID VALVE)

Check resistance between CVT unit connector terminal and ground.

CVT unit connector		Ground	Resistance (Approx.)
connector	Terminal		
F24	2		3.0 – 9.0 Ω

Is the inspection result normal?

YES >> INSPECTION END
NO >> Replace transaxle assembly. Refer to TM-168, "Exploded View".

P0776 PRESSURE CONTROL SOLENOID B PERFORMANCE (SEC PRESSURE SOLENOID VALVE)

Description

INFOID:0000000003848993

The pressure control solenoid valve B (secondary pressure solenoid valve) regulates the secondary pressure to suit the driving condition in response to the signal sent from the TCM.

DTC Logic

INFOID:0000000003848994

DTC DETECTION LOGIC

DTC	Item (CONSULT-III screen term)	Malfunction is detected when...	Possible cause
P0776	PRS CNT SOL/B FCTN	Secondary pressure is too high or too low compared with the commanded value while driving.	• Harness or connectors (Solenoid circuit is open or shorted.) • Pressure control solenoid valve B (secondary pressure solenoid valve system) • Transmission fluid pressure sensor A (secondary pressure sensor) • Line pressure control system

DTC CONFIRMATION PROCEDURE

CAUTION:

Always drive vehicle at a safe speed.

NOTE:

Immediately after performing any “DTC CONFIRMATION PROCEDURE”, always turn ignition switch OFF. Then wait at least 10 seconds before performing the next test.

1. CHECK DTC DETECTION

With CONSULT-III

1. Turn ignition switch ON.
2. Select “Data Monitor” mode for “TRANSMISSION”.
3. Start engine and maintain the following conditions for at least 30 consecutive seconds.

ATF TEMP SEN	: 1.0 – 2.0 V
ACC PEDAL OPEN	: More than 1.0/8
RANGE	: “D” position
VEHICLE SPEED	: 10 km/h (6 MPH) or more
Driving location	: Driving the vehicle uphill (increased engine load) will help maintain the driving conditions required for this test.

With GST

Follow the procedure “With CONSULT-III”.

Is “P0776 PRS CNT SOL/B FCTN” detected?

YES >> Go to TM-70, "Diagnosis Procedure".
NO >> Check intermittent incident. Refer to GI-35, "Intermittent Incident".

Diagnosis Procedure

INFOID:0000000003848995

1. CHECK LINE PRESSURE

Perform line pressure test. Refer to TM-146, "Inspection and Judgment".

Is the inspection result normal?

YES >> GO TO 2.
NO >> Repair or replace damaged parts. Refer to TM-146, "Inspection and Judgment".

2. CHECK PRESSURE CONTROL SOLENOID VALVE B (SECONDARY PRESSURE SOLENOID VALVE)

1. Turn ignition switch OFF.
2. Disconnect CVT unit connector.

3. Check pressure control solenoid valve B (secondary pressure solenoid valve). Refer to TM-71, "Component Inspection [Pressure Control Solenoid Valve B (Secondary Pressure Solenoid Valve)]".

Is the inspection result normal?

YES >> GO TO 3.
NO >> Replace transaxle assembly. Refer to TM-168, "Exploded View".

3. CHECK PRESSURE CONTROL SOLENOID VALVE A (LINE PRESSURE SOLENOID VALVE)

Check pressure control solenoid valve A (line pressure solenoid valve). Refer to TM-71, "Component Inspection [Pressure Control Solenoid Valve A (Line Pressure Solenoid Valve)]".

Is the inspection result normal?

YES >> GO TO 4.
NO >> Replace transaxle assembly. Refer to TM-168, "Exploded View".

4. CHECK TRANSMISSION FLUID PRESSURE SENSOR A (SECONDARY PRESSURE SENSOR) SYSTEM

Check transmission fluid pressure sensor A (secondary pressure sensor) system. Refer to TM-74, "DTC Logic".

Is the inspection result normal?

YES >> GO TO 5.
NO >> Repair or replace damaged parts.

5. DETECT MALFUNCTIONING ITEMS

Check TCM connector pin terminals for damage or loose connection with harness connector.

Is the inspection result normal?

YES >> Replace TCM. Refer to TM-168, "Exploded View".
NO >> Repair or replace damaged parts.

Component Inspection [Pressure Control Solenoid Valve A (Line Pressure Solenoid Valve)]

INFOID:0000000003848996

1. CHECK PRESSURE CONTROL SOLENOID VALVE A (LINE PRESSURE SOLENOID VALVE)

Check resistance between CVT unit connector terminal and ground.

CVT unit connector		Ground	Resistance (Approx.)
Connector	Terminal		
F24	2		3.0 – 9.0 Ω

Is the inspection result normal?

YES >> INSPECTION END
NO >> Replace transaxle assembly. Refer to TM-168, "Exploded View".

Component Inspection [Pressure Control Solenoid Valve B (Secondary Pressure Solenoid Valve)]

INFOID:0000000003848997

1. CHECK PRESSURE CONTROL SOLENOID VALVE B (SECONDARY PRESSURE SOLENOID VALVE)

Check resistance between CVT unit connector terminal and ground.

CVT unit connector		Ground	Resistance (Approx.)
connector	Terminal		
F24	3		3.0 – 9.0 Ω

Is the inspection result normal?

YES >> INSPECTION END
NO >> Replace transaxle assembly. Refer to TM-168, "Exploded View".

P0778 PRESSURE CONTROL SOLENOID B ELECTRICAL (SEC PRESSURE SOLENOID VALVE)

Description

INFOID:0000000003848998

The pressure control solenoid valve B (secondary pressure solenoid valve) regulates the oil pump discharge pressure to suit the driving condition in response to the signal sent from the TCM.

DTC Logic

INFOID:0000000003848999

DTC DETECTION LOGIC

DTC	Item (CONSULT-III screen term)	Malfunction is detected when...	Possible cause
P0778	PRS CNT SOL/B CIRC	• Normal voltage is not applied to solenoid due to cut line, short, etc. • TCM detects as irregular by comparing target value with monitor value.	• Harness or connectors (Solenoid circuit is open or shorted.) • Pressure control solenoid valve B (secondary pressure solenoid valve)

DTC CONFIRMATION PROCEDURE

CAUTION:

Always drive vehicle at a safe speed.

NOTE:

Immediately after performing any “DTC CONFIRMATION PROCEDURE”, always turn ignition switch OFF. Then wait at least 10 seconds before performing the next test.

1. CHECK DTC DETECTION

With CONSULT-III

1. Start engine.
2. Drive vehicle and maintain the following conditions for at least 5 consecutive seconds.
3. Perform “Self-Diagnostic Results” mode for “TRANSMISSION”.

With GST

Follow the procedure “With CONSULT-III”.

Is “P0778 PRS CNT SOL/B CIRC” detected?

YES >> Go to TM-72, "Diagnosis Procedure".
NO >> Check intermittent incident. Refer to GI-35, "Intermittent Incident".

Diagnosis Procedure

INFOID:0000000003849000

1. CHECK PRESSURE CONTROL SOLENOID VALVE B (SECONDARY PRESSURE SOLENOID VALVE) CIRCUIT

1. Turn ignition switch OFF.
2. Disconnect TCM connector.
3. Check resistance between TCM vehicle side harness connector terminal and ground.

TCM vehicle side harness connector		Ground	Resistance (Approx.)
Connector	Terminal		
F23	39		3.0 – 9.0 Ω

Is the inspection result normal?

YES >> GO TO 5.
NO >> GO TO 2.

2. CHECK HARNESS BETWEEN TCM AND PRESSURE CONTROL SOLENOID VALVE B (SECONDARY PRESSURE SOLENOID VALVE) (PART 1)

1. Disconnect CVT unit connector.
2. Check continuity between TCM vehicle side harness connector terminal and CVT unit vehicle side harness connector terminal.

TCM vehicle side harness connector		CVT unit vehicle side harness connector		Continuity
Connector	Terminal	Connector	Terminal	
F23	39	F24	3	Existed

Is the inspection result normal?

YES >> GO TO 3.
NO >> Repair or replace damaged parts.

3. CHECK HARNESS BETWEEN TCM AND PRESSURE CONTROL SOLENOID VALVE B (SECONDARY PRESSURE SOLENOID VALVE) (PART 2)

Check continuity between TCM vehicle side harness connector terminal and ground.

TCM vehicle side harness connector		Ground	Continuity
Connector	Terminal		
F23	39		Not existed

Is the inspection result normal?

YES >> GO TO 4.
NO >> Repair or replace damaged parts.

4. CHECK PRESSURE CONTROL SOLENOID VALVE B (SECONDARY PRESSURE SOLENOID VALVE)

Check pressure control solenoid valve B (secondary pressure solenoid valve). Refer to TM-73, "Component Inspection [Pressure Control Solenoid Valve B (Secondary Pressure Solenoid Valve)]".

Is the inspection result normal?

YES >> GO TO 5.
NO >> Replace transaxle assembly. Refer to TM-168, "Exploded View".

5. DETECT MALFUNCTIONING ITEMS

Check TCM connector pin terminals for damage or loose connection with harness connector.

Is the inspection result normal?

YES >> Replace TCM. Refer to TM-153, "Exploded View".
NO >> Repair or replace damaged parts.

Component Inspection [Pressure Control Solenoid Valve B (Secondary Pressure Solenoid Valve)]

INFOID:0000000003849001

1. CHECK PRESSURE CONTROL SOLENOID VALVE B (SECONDARY PRESSURE SOLENOID VALVE)

Check resistance between CVT unit connector terminal and ground.

CVT unit connector		Ground	Resistance (Approx.)
Connector	Terminal		
F24	3		3.0 – 9.0 Ω

Is the inspection result normal?

YES >> INSPECTION END
NO >> Replace transaxle assembly. Refer to TM-168, "Exploded View".

P0840 TRANSMISSION FLUID PRESSURE SENSOR A (SEC PRESSURE SENSOR)

Description

INFOID:0000000003849002

The transmission fluid pressure sensor A (secondary pressure sensor) detects secondary pressure of CVT and sends the signal to the TCM.

DTC Logic

INFOID:0000000003849003

DTC DETECTION LOGIC

DTC	Item (CONSULT-III screen term)	Malfunction is detected when...	Possible cause
P0840	TR PRS SENS/A CIRC	Signal voltage of the transmission fluid pressure sensor A (secondary pressure sensor) is too high or too low while driving.	• Harness or connectors (Sensor circuit is open or shorted.) • Transmission fluid pressure sensor A (secondary pressure sensor)

DTC CONFIRMATION PROCEDURE

NOTE:
Immediately after performing any “DTC CONFIRMATION PROCEDURE”, always turn ignition switch OFF. Then wait at least 10 seconds before performing the next test.

1. CHECK DTC DETECTION

With CONSULT-III

1. Turn ignition switch ON.
2. Select “Data Monitor” mode for “TRANSMISSION”.
3. Make sure that output voltage of CVT fluid temperature sensor is within the range below.

ATF TEMP SEN : 1.0 – 2.0 V

If it is out of range, drive the vehicle to decrease the voltage (warm up the fluid) or stop engine to increase the voltage (cool down the fluid)

4. Start engine and wait for at least 5 consecutive seconds.

With GST

Follow the procedure “With CONSULT-III”.

Is “P0840 TR PRS SENS/A CIRC” detected?

YES >> Go to TM-74, "Diagnosis Procedure".
NO >> Check intermittent incident. Refer to GI-35, "Intermittent Incident".

Diagnosis Procedure

INFOID:0000000003849004

1. CHECK INPUT SIGNAL

1. Start engine.
2. Check voltage between TCM connector terminal and ground.

TCM connector		Ground	Condition	Voltage (Approx.)
Connector	Terminal			
F23	15		“N” position idle	1.0 - 1.5 V

Is the inspection result normal?

YES >> GO TO 8.
NO >> GO TO 2.

2. CHECK POWER AND SENSOR GROUND

Check voltage between TCM connector terminals.

TCM connector			Voltage (Approx.)
Connector	Terminal		
	(+)	(-)	
F23	26	25	4.75 - 5.25 V

Is the inspection result normal?

YES >> GO TO 3.
NO >> GO TO 5.

3. CHECK HARNESS BETWEEN TCM AND CVT UNIT [TRANSMISSION FLUID PRESSURE SENSOR A (SECONDARY PRESSURE SENSOR)] (PART 1)

1. Turn ignition switch OFF.
2. Disconnect TCM connector and CVT unit connector.
3. Check continuity between TCM vehicle side harness connector terminal and CVT unit vehicle side harness connector terminal.

TCM vehicle side harness connector		CVT unit vehicle side harness connector		Continuity
Connector	Terminal	Connector	Terminal	
F23	15	F24	23	Existed

Is the inspection result normal?

YES >> GO TO 4.
NO >> Repair or replace damaged parts.

4. CHECK HARNESS BETWEEN TCM AND CVT UNIT [TRANSMISSION FLUID PRESSURE SENSOR A (SECONDARY PRESSURE SENSOR)] (PART 2)

Check continuity between TCM vehicle side harness connector terminal and ground.

TCM vehicle side harness connector		Ground	Continuity
Connector	Terminal		
F23	15		Not existed

Is the inspection result normal?

YES >> GO TO 7.
NO >> Repair or replace damaged parts.

5. CHECK HARNESS BETWEEN TCM AND CVT UNIT (SENSOR POWER AND SENSOR GROUND) (PART 1)

1. Turn ignition switch OFF.
2. Disconnect TCM connector and CVT unit connector.
3. Check continuity between TCM vehicle side harness connector terminals and CVT unit vehicle side harness connector terminals.

TCM vehicle side harness connector		CVT unit vehicle side harness connector		Continuity
Connector	Terminal	Connector	Terminal	
F23	25	F24	19	Existed
	26		20	

Is the inspection result normal?

YES >> GO TO 6.
NO >> Repair or replace damaged parts.

6. CHECK HARNESS BETWEEN TCM AND CVT UNIT (SENSOR POWER AND SENSOR GROUND) (PART 2)

Check continuity between TCM vehicle side harness connector terminals and ground.

TCM vehicle side harness connector		Ground	Continuity
Connector	Terminal		
F23	25		Not existed
	26		

Is the inspection result normal?

YES >> GO TO 7.
NO >> Repair or replace damaged parts.

7. CHECK TCM

1. Replace with the same type of TCM. Refer to TM-153, "Exploded View".
2. Connect each connector.
3. Perform “DTC CONFIRMATION PROCEDURE”. Refer to TM-74, "DTC Logic".

Is “P0840 TR PRS SENS/A CIRC” detected?

YES >> Replace transaxle assembly. Refer to TM-168, "Exploded View".
NO >> Replace TCM. Refer to TM-153, "Exploded View".

8. DETECT MALFUNCTIONING ITEMS

Check TCM connector pin terminals for damage or loose connection with harness connector.

Is the inspection result normal?

YES >> Replace TCM. Refer to TM-153, "Exploded View".
NO >> Repair or replace damaged parts.

P0841 PRESSURE SENSOR FUNCTION

Description

INFOID:0000000003849005

Using the engine load (throttle position), the primary pulley revolution speed, and the secondary pulley revolution speed as input signals, TCM changes the operating pressure of the primary pulley and the secondary pulley and changes the groove width of the pulley to control the gear ratio.

DTC Logic

INFOID:0000000003849006

DTC DETECTION LOGIC

DTC	Item (CONSULT-III screen term)	Malfunction is detected when...	Possible cause
P0841	PRESS SEN/FNCTN	Correlation between the values of the transmission fluid pressure sensor A (secondary pressure sensor) and the transmission fluid pressure sensor B (primary pressure sensor) is out of specification.	• Harness or connectors (Sensor circuit is open or shorted.) • Transmission fluid pressure sensor A (secondary pressure sensor) • Transmission fluid pressure sensor B (primary pressure sensor)

DTC CONFIRMATION PROCEDURE

CAUTION:
Always drive vehicle at a safe speed.
NOTE:
Immediately after performing any “DTC CONFIRMATION PROCEDURE”, always turn ignition switch OFF. Then wait at least 10 seconds before performing the next test.

1. CHECK DTC DETECTION

With CONSULT-III
1. Turn ignition switch ON.
2. Select “Data Monitor” mode for “TRANSMISSION”.
3. Start engine and maintain the following conditions for at least 12 consecutive seconds.

VEHICLE SPEED	: 40 km/h (25 MPH) or more
RANGE	: “D” position

Is “P0841 PRESS SEN/FNCTN” detected?

YES >> Go to TM-77, "Diagnosis Procedure".
NO >> Check intermittent incident. Refer to GI-35, "Intermittent Incident".

Diagnosis Procedure

INFOID:0000000003849007

1. CHECK LINE PRESSURE

Perform line pressure test. Refer to TM-146, "Inspection and Judgment".

Is the inspection result normal?

YES >> .GO TO 2.
NO >> Repair or replace damaged parts. Refer to TM-146, "Inspection and Judgment".

2. CHECK TRANSMISSION FLUID PRESSURE SENSOR A (SECONDARY PRESSURE SENSOR) SYSTEM

Check transmission fluid pressure sensor A (secondary pressure sensor) system. Refer to TM-74, "Description".

Is the inspection result normal?

YES >> GO TO 3.
NO >> Repair or replace damaged parts.

3. CHECK TRANSMISSION FLUID PRESSURE SENSOR B (PRIMARY PRESSURE SENSOR) SYSTEM

Check transmission fluid pressure sensor B (primary pressure sensor) system. Refer to TM-80, "Description".

Is the inspection result normal?

YES >> GO TO 4.
NO >> Repair or replace damaged parts.

4. CHECK PRESSURE CONTROL SOLENOID VALVE A (LINE PRESSURE SOLENOID VALVE)

1. Turn ignition switch OFF.
2. Disconnect CVT unit connector.
3. Check pressure control solenoid valve A (line pressure solenoid valve). Refer to TM-78, "Component Inspection [Pressure Control Solenoid Valve A (Line Pressure Solenoid Valve)]".

Is the inspection result normal?

YES >> GO TO 5.
NO >> Repair or replace damaged parts.

5. CHECK PRESSURE CONTROL SOLENOID VALVE B (SECONDARY PRESSURE SOLENOID VALVE)

Check pressure control solenoid valve B (secondary pressure solenoid valve). Refer to TM-78, "Component Inspection [Pressure Control Solenoid Valve B (Secondary Pressure Solenoid Valve)]".

Is the inspection result normal?

YES >> GO TO 6.
NO >> Repair or replace damaged parts.

6. CHECK STEP MOTOR SYSTEM

Check step motor system. Refer to TM-97, "Description".

Is the inspection result normal?

YES >> GO TO 7.
NO >> Repair or replace damaged parts.

7. DETECT MALFUNCTIONING ITEMS

Check TCM connector pin terminals for damage or loose connection with harness connector.

Is the inspection result normal?

YES >> Replace TCM. Refer to TM-153, "Exploded View".
NO >> Repair or replace damaged parts.

Component Inspection [Pressure Control Solenoid Valve A (Line Pressure Solenoid Valve)]

INFOID:0000000003849008

1. CHECK PRESSURE CONTROL SOLENOID VALVE A (LINE PRESSURE SOLENOID VALVE)

Check resistance between CVT unit connector terminal and ground.

CVT unit connector		Ground	Resistance (Approx.)
Connector	Terminal		
F24	2		3.0 – 9.0 Ω

Is the inspection result normal?

YES >> INSPECTION END
NO >> Replace transaxle assembly. Refer to TM-168, "Exploded View".

Component Inspection [Pressure Control Solenoid Valve B (Secondary Pressure Solenoid Valve)]

INFOID:0000000003849009

1. CHECK PRESSURE CONTROL SOLENOID VALVE B (SECONDARY PRESSURE SOLENOID VALVE)

Check resistance between CVT unit connector terminal and ground.

CVT unit connector		Ground	Resistance (Approx.)
Connector	Terminal		
F24	3		3.0 – 9.0 Ω

Is the inspection result normal?

YES >> INSPECTION END
NO >> Replace transaxle assembly. Refer to TM-168, "Exploded View".

P0845 TRANSMISSION FLUID PRESSURE SENSOR B (PRI PRESSURE SENSOR)

Description

INFOID:0000000003849010

The transmission fluid pressure sensor B (primary pressure sensor) detects primary pressure of CVT and sends the signal to the TCM.

DTC Logic

INFOID:0000000003849011

DTC DETECTION LOGIC

DTC	Item (CONSULT-III screen term)	Malfunction is detected when...	Possible cause
P0845	TR PRS SENS/B CIRC	Signal voltage of the transmission fluid pressure sensor B (primary pressure sensor) is too high or too low while driving.	• Harness or connectors (Sensor circuit is open or shorted.) • Transmission fluid pressure sensor B (primary pressure sensor)

DTC CONFIRMATION PROCEDURE

NOTE:
Immediately after performing any “DTC CONFIRMATION PROCEDURE”, always turn ignition switch OFF. Then wait at least 10 seconds before performing the next test.

1. CHECK DTC DETECTION

With CONSULT-III

1. Turn ignition switch ON.
2. Select “Data Monitor” mode for “TRANSMISSION”.
3. Make sure that output voltage of line temperature sensor is within the range below.

ATF TEMP SEN : 1.0 – 2.0 V

If it is out of range, drive the vehicle to decrease the voltage (warm up the fluid) or stop engine to increase the voltage (cool down the fluid)

4. Start engine and wait for at least 5 consecutive seconds.

With GST

Follow the procedure “With CONSULT-III”.

Is “P0845 TR PRS SENS/B CIRC” detected?

YES >> Go to TM-80, "Diagnosis Procedure".
NO >> Check intermittent incident. Refer to GI-35, "Intermittent Incident".

Diagnosis Procedure

INFOID:0000000003849012

1. CHECK INPUT SIGNAL

1. Start engine.
2. Check voltage between TCM connector terminal and ground.

TCM connector		Ground	Condition	Voltage (Approx.)
Connector	Terminal			
F23	14		“N” position idle	0.5 - 0.8 V

Is the inspection result normal?

YES >> GO TO 8.
NO >> GO TO 2.

2. CHECK SENSOR POWER AND SENSOR GROUND

Check voltage between TCM connector terminals.

TCM connector			Voltage (Approx.)
Connector	Terminal		
	(+)	(-)	
F23	25	26	4.75 - 5.25 V

Is the inspection result normal?

YES >> GO TO 3.
NO >> GO TO 5.

3. CHECK HARNESS BETWEEN TCM AND CVT UNIT [TRANSMISSION FLUID PRESSURE SENSOR B (PRIMARY PRESSURE SENSOR)] (PART 1)

1. Turn ignition switch OFF.
2. Disconnect TCM connector and CVT unit connector.
3. Check continuity between TCM vehicle side harness connector terminal and CVT unit vehicle side harness connector terminal.

TCM vehicle side harness connector		CVT unit vehicle side harness connector		Continuity
Connector	Terminal	Connector	Terminal	
F23	14	F24	25	Existed

Is the inspection result normal?

YES >> GO TO 4.
NO >> Repair or replace damaged parts.

4. CHECK HARNESS BETWEEN TCM AND CVT UNIT [TRANSMISSION FLUID PRESSURE SENSOR B (PRIMARY PRESSURE SENSOR)] (PART 2)

Check continuity between TCM vehicle side harness connector terminal and ground.

TCM vehicle side harness connector		Ground	Continuity
Connector	Terminal		
F23	14		Not existed

Is the inspection result normal?

YES >> GO TO 7.
NO >> Repair or replace damaged parts.

5. CHECK HARNESS BETWEEN TCM AND CVT UNIT (SENSOR POWER AND SENSOR GROUND) (PART 1)

1. Turn ignition switch OFF.
2. Disconnect TCM connector and CVT unit connector.
3. Check continuity between TCM vehicle side harness connector terminal and CVT unit vehicle side harness connector terminals.

TCM vehicle side harness connector		CVT unit vehicle side harness connector		Continuity
Connector	Terminal	Connector	Terminal	
F23	25	F24	19	Existed
	26		20	

Is the inspection result normal?

YES >> GO TO 6.
NO >> Repair or replace damaged parts.

6. CHECK HARNESS BETWEEN TCM AND CVT UNIT (SENSOR POWER AND SENSOR GROUND) (PART 2)

Check continuity between TCM vehicle side harness connector terminals and ground.

TCM vehicle side harness connector		Ground	Continuity
Connector	Terminal		
F23	25		Not existed
	26		

Is the inspection result normal?

YES >> GO TO 7.
NO >> Repair or replace damaged parts.

7. CHECK TCM

1. Replace with the same type of TCM. Refer to TM-153, "Exploded View".
2. Connect each connector.
3. Perform “DTC CONFIRMATION PROCEDURE”. Refer to TM-80, "DTC Logic".

Is “P0845 TR PRS SENS/B CIRC” detected?

YES >> Replace transaxle assembly. Refer to TM-168, "Exploded View".
NO >> Replace TCM. Refer to TM-153, "Exploded View".

8. DETECT MALFUNCTIONING ITEMS

Check TCM connector pin terminals for damage or loose connection with harness connector.

Is the inspection result normal?

YES >> Replace TCM. Refer to TM-153, "Exploded View".
NO >> Repair or replace damaged parts.

P0868 SECONDARY PRESSURE DOWN

Description

INFOID:0000000003849013

The pressure control solenoid valve B (secondary pressure solenoid valve) regulates the secondary pressure to suit the driving condition in response to the signal sent from the TCM.

DTC Logic

INFOID:0000000003849014

DTC DETECTION LOGIC

DTC	Item (CONSULT-III screen term)	Malfunction is detected when...	Possible cause
P0868	SEC/PRESS DOWN	Secondary fluid pressure is too low compared with the commanded value while driving.	• Harness or connectors (Solenoid circuit is open or shorted.) • Pressure control solenoid valve B (secondary pressure solenoid valve) system • Transmission fluid pressure sensor A (secondary pressure sensor) • Line pressure control system

DTC CONFIRMATION PROCEDURE

CAUTION:
Always drive vehicle at a safe speed.
NOTE:
Immediately after performing any “DTC CONFIRMATION PROCEDURE”, always turn ignition switch OFF. Then wait at least 10 seconds before performing the next test.

1. CHECK DTC DETECTION

With CONSULT-III

1. Turn ignition switch ON.
2. Select “Data Monitor” mode for “TRANSMISSION”.
3. Make sure that output voltage of CVT fluid temperature sensor is within the range below.

ATF TEMP SEN	: 1.0 – 2.0 V

If it is out of range, drive the vehicle to decrease the voltage (warm up the fluid) or stop engine to increase the voltage (cool down the fluid)

4. Start engine and maintain the following conditions for at least 10 consecutive seconds.

VEHICLE SPEED (accelerate slowly)	: 0 → 50 km/h (31 MPH)
ACC PEDAL OPEN	: 0.5/8 – 1.0/8
RANGE	: “D” position

Is “P0868 SEC/PRESS DOWN” detected?

YES >> Go to TM-83, "Diagnosis Procedure".
NO >> Check intermittent incident. Refer to GI-35, "Intermittent Incident".

Diagnosis Procedure

INFOID:0000000003849015

1. CHECK LINE PRESSURE

Perform line pressure test. Refer to TM-146, "Inspection and Judgment".

Is the inspection result normal?

YES >> GO TO 2.
NO >> Repair or replace damaged parts. Refer to TM-146, "Inspection and Judgment".

2. CHECK PRESSURE CONTROL SOLENOID VALVE B (SECONDARY PRESSURE SOLENOID VALVE)

1. Turn ignition switch OFF.
2. Disconnect CVT unit connector.

3. Check pressure control solenoid valve B (secondary pressure solenoid valve). Refer to TM-84, "Component Inspection [Pressure Control Solenoid Valve B (Secondary Pressure Solenoid Valve)]".

Is the inspection result normal?

YES >> GO TO 3.
NO >> Repair or replace damaged parts.

3. CHECK PRESSURE CONTROL SOLENOID VALVE A (LINE PRESSURE SOLENOID VALVE)

Check pressure control solenoid valve A (line pressure solenoid valve). Refer to TM-84, "Component Inspection [Pressure Control Solenoid Valve A (Line Pressure Solenoid Valve)]".

Is the inspection result normal?

YES >> GO TO 4.
NO >> Repair or replace damaged parts.

4. CHECK TRANSMISSION FLUID PRESSURE SENSOR A (SECONDARY PRESSURE SENSOR) SYSTEM

Check transmission fluid pressure sensor A (secondary pressure sensor) system. Refer to TM-74, "DTC Logic".

Is the inspection result normal?

YES >> GO TO 5.
NO >> Repair or replace damaged parts.

5. DETECT MALFUNCTIONING ITEMS

Check TCM connector pin terminals for damage or loose connection with harness connector.

Is the inspection result normal?

YES >> Replace TCM. Refer to TM-153, "Exploded View".
NO >> Repair or replace damaged parts.

Component Inspection [Pressure Control Solenoid Valve A (Line Pressure Solenoid Valve)]

INFOID:0000000003849016

1. CHECK PRESSURE CONTROL SOLENOID VALVE A (LINE PRESSURE SOLENOID VALVE)

Check resistance between CVT unit connector terminal and ground.

CVT unit connector		Ground	Resistance (Approx.)
Connector	Terminal		
F24	2		3.0 – 9.0 Ω

Is the inspection result normal?

YES >> INSPECTION END
NO >> Replace transaxle assembly. Refer to TM-168, "Exploded View".

Component Inspection [Pressure Control Solenoid Valve B (Secondary Pressure Solenoid Valve)]

INFOID:0000000003849017

1. CHECK PRESSURE CONTROL SOLENOID VALVE B (SECONDARY PRESSURE SOLENOID VALVE)

Check resistance between CVT unit connector terminal and ground.

CVT unit connector		Ground	Resistance (Approx.)
Connector	Terminal		
F24	3		3.0 – 9.0 Ω

Is the inspection result normal?

YES >> INSPECTION END
NO >> Replace transaxle assembly. Refer to TM-168, "Exploded View".

P1701 TRANSMISSION CONTROL MODULE (POWER SUPPLY)

Description

INFOID:0000000003849018

When the power supply to the TCM is cut off, for example because the battery is removed, and the self-diagnosis memory function stops, a malfunction is detected.

NOTE:
Since “P1701 TCM-POWER SUPPLY” is indicated when replacing TCM, perform diagnosis after erasing “Self-Diagnostic Results”.

DTC Logic

INFOID:0000000003849019

DTC DETECTION LOGIC

DTC	Item (CONSULT-III screen term)	Malfunction is detected when...	Possible cause
P1701	TCM-POWER SUPPLY	• When the power supply to the TCM is cut off, for example because the battery is removed, and the self-diagnosis memory function stops. • This is not a malfunction message (Whenever shutting off a power supply to the TCM, this message appears on the screen).	Harness or connectors (Battery or ignition switch and TCM circuit is open or shorted.)

DTC CONFIRMATION PROCEDURE

NOTE:
Immediately after performing any “DTC CONFIRMATION PROCEDURE”, always turn ignition switch OFF. Then wait at least 10 seconds before performing the next test.

1. CHECK DTC DETECTION

With CONSULT-III

1. Turn ignition switch ON.
2. Wait for at least 2 consecutive seconds.
3. Perform “Self-Diagnostic Results” mode for “TRANSMISSION”.

Is “P1701 TCM-POWER SUPPLY” detected?

YES >> Go to TM-85, "Diagnosis Procedure".
NO >> Check intermittent incident. Refer to GI-35, "Intermittent Incident".

Diagnosis Procedure

INFOID:0000000003849020

1. CHECK TCM POWER SOURCE

1. Turn ignition switch OFF.
2. Disconnect TCM connector.
3. Check voltage between TCM vehicle side harness connector terminals.

TCM vehicle side harness connector			Condition	Voltage (Approx.)
Connector	Terminal (+)	Terminal (-)		
F23	46	5, 42	Ignition switch ON	Battery voltage
			Ignition switch OFF	0 V
	48		Ignition switch ON	Battery voltage
			Ignition switch OFF	0 V
	45		Always	Battery voltage
	47			

Is the inspection result normal?

YES >> GO TO 6.
NO >> GO TO 2.

2. CHECK TCM GROUND CIRCUIT

1. Turn ignition switch OFF.
2. Check continuity between TCM vehicle side harness connector terminals and ground.

TCM vehicle side harness connector		Ground	Continuity
Connector	Terminal		
F23	5		Existed
	42		

Is the inspection result normal?

YES >> GO TO 3.
NO >> Repair or replace damaged parts.

3. CHECK TCM POWER CIRCUIT

Check voltage between TCM vehicle side harness connector terminals and ground.

TCM vehicle side harness connector		Ground	Condition	Voltage (Approx.)
Connector	Terminal			
F23	46	Ground	Ignition switch ON	Battery voltage
			Ignition switch OFF	0 V
	48		Ignition switch ON	Battery voltage
			Ignition switch OFF	0 V
	45		Always	Battery voltage
	47			

Is the inspection result normal?

YES >> GO TO 6.
NO >> GO TO 4.

4. CHECK HARNESS BETWEEN TCM AND IPDM E/R AND BETWEEN TCM AND BATTERY (PART 1)

1. Turn ignition switch OFF.
2. Disconnect IPDM E/R connector.
3. Check continuity between TCM vehicle side harness connector terminals and IPDM E/R vehicle side harness connector terminal.

TCM vehicle side harness connector		IPDM E/R vehicle side harness connector		Continuity
Connector	Terminal	Connector	Terminal	
F23	46	F12	58	Existed
	48			

4. Disconnect fuse block J/B connector.
5. Check continuity between TCM vehicle side harness connector terminals and fuse block J/B vehicle side harness connector terminal.

TCM vehicle side harness connector		Fuse block J/B vehicle side harness connector		Continuity
Connector	Terminal	Connector	Terminal	
F23	45	E103	12F	Existed
	47			

Is the inspection result normal?

YES >> GO TO 5.
NO >> Repair or replace damaged parts.

5. CHECK HARNESS BETWEEN TCM AND IPDM E/R AND BETWEEN TCM AND BATTERY (PART 2)

Check continuity between TCM vehicle side harness connector terminals and ground.

TCM vehicle side harness connector			Continuity
Connector	Terminal		
F23	45	Ground	Not existed
	46		
	47		
	48		

Is the inspection result normal?

YES >> Check the following. If NG, repair or replace damaged parts.
- 10A fuse (No. 43, located in IPDM E/R)
- 10A fuse (No. 11, located in fuse block J/B)
- Ignition switch. Refer to PG-55, "Wiring Diagram - IGNITION POWER SUPPLY -".

NO >> Repair or replace damaged parts.

6. DETECT MALFUNCTIONING ITEMS

Check TCM connector pin terminals for damage or loose connection with harness connector.

Is the inspection result normal?

YES >> Replace TCM. Refer to TM-153, "Exploded View".

NO >> Repair or replace damaged parts.

P1705 THROTTLE POSITION SENSOR

Description

INFOID:0000000003849021

The electric throttle control actuator consists of throttle control motor, accelerator pedal position sensor, throttle position sensor, etc. The actuator sends the signal to the ECM, and ECM sends the signal to TCM via CAN communication.

DTC Logic

INFOID:0000000003849022

DTC DETECTION LOGIC

DTC	Item (CONSULT-III screen term)	Malfunction is detected when...	Possible cause
P1705	TP SEN/CIRC A/T	TCM does not receive the proper accelerator pedal position signals (input via CAN communication) from ECM.	• ECM • Harness or connectors (CAN communication line is open or shorted.)

DTC CONFIRMATION PROCEDURE

NOTE:
Immediately after performing any “DTC CONFIRMATION PROCEDURE”, always turn ignition switch OFF. Then wait at least 10 seconds before performing the next test.

1. CHECK DTC DETECTION

With CONSULT-III
1. Turn ignition switch ON.
2. Depress accelerator pedal fully and release it, then wait for 5 seconds.
3. Perform “Self-Diagnostic Results” mode for “TRANSMISSION”.

Is “P1705 TP SEN/CIRC A/T” detected?

YES >> Go to TM-88, "Diagnosis Procedure".
NO >> Check intermittent incident. Refer to GI-35, "Intermittent Incident".

Diagnosis Procedure

INFOID:0000000003849023

1. CHECK DTC WITH ECM

With CONSULT-III
1. Turn ignition switch ON.
2. Perform “Self-Diagnostic Results” mode for “ENGINE”.

Is the inspection result normal?

YES >> GO TO 2.
NO >> Check DTC Detected Item. Refer to EC-389, "DTC Index".

2. CHECK DTC WITH TCM

With CONSULT-III
Perform “Self-Diagnostic Results” mode for “TRANSMISSION”.

Is “P1705 TP SEN/CIRC A/T” detected?

YES >> Replace TCM. Refer to TM-153, "Exploded View".
NO >> GO TO 3.

3. DETECT MALFUNCTIONING ITEMS

Check TCM connector pin terminals for damage or loose connection with harness connector.

Is the inspection result normal?

YES >> Replace TCM. Refer to TM-153, "Exploded View".
NO >> Repair or replace damaged parts.

P1722 ESTM VEHICLE SPEED SIGNAL

Description

INFOID:0000000003849024

The vehicle speed signal is transmitted from ABS actuator and electric unit (control unit) to TCM via CAN communication line.

DTC Logic

INFOID:0000000003849025

DTC DETECTION LOGIC

DTC	Item (CONSULT-III screen term)	Malfunction is detected when...	Possible cause
P1722	ESTM VEH SPD SIG	• CAN communication with the ABS actuator and the electric unit (control unit) is malfunctioning. • There is a big difference between the vehicle speed signal from the ABS actuator and the electric unit (control unit), and the vehicle speed sensor signal.	• Harness or connectors (Sensor circuit is open or shorted.) • ABS actuator and electric unit (control unit)

DTC CONFIRMATION PROCEDURE

CAUTION:
Always drive vehicle at a safe speed.
NOTE:
Immediately after performing any “DTC CONFIRMATION PROCEDURE”, always turn ignition switch OFF. Then wait at least 10 seconds before performing the next test.

1. CHECK DTC DETECTION

With CONSULT-III
1. Turn ignition switch ON.
2. Select “Data Monitor” mode for “TRANSMISSION”.
3. Start engine and maintain the following conditions for at least 5 consecutive seconds.

ACC PEDAL OPEN	: 1.0/8 or less
VEHICLE SPEED	: 30 km/h (19 MPH) or more

Is “P1722 ESTM VEH SPD SIG” detected?

YES >> Go to TM-89, "Diagnosis Procedure".
NO >> Check intermittent incident. Refer to GI-35, "Intermittent Incident".

Diagnosis Procedure

INFOID:0000000003849026

1. CHECK DTC WITH ABS ACTUATOR AND ELECTRIC UNIT (CONTROL UNIT)

With CONSULT-III
Perform “Self-Diagnostic Results” mode for “ABS”.

Is the inspection result normal?

YES >> GO TO 2.
NO >> Check DTC detected item. Refer to BRC-140, "DTC No. Index" (VDC/TCS/ABS).

2. CHECK DTC WITH TCM

With CONSULT-III
Perform “Self-Diagnostic Results” mode for “TRANSMISSION”.

Is “P1722 ESTM VEH SPD SIG” detected?

YES >> Replace TCM. Refer to TM-153, "Exploded View".
NO >> GO TO 3.

3. DETECT MALFUNCTIONING ITEMS

Check TCM connector pin terminals for damage or loose connection with harness connector.

Is the inspection result normal?

YES >> Replace TCM. Refer to TM-153, "Exploded View".
NO >> Repair or replace damaged parts.

P1723 CVT SPEED SENSOR FUNCTION

Description

INFOID:0000000003849027

The vehicle speed sensor CVT [output speed sensor (secondary speed sensor)] detects the revolution of parking gear and generates a pulse signal. The pulse signal is sent to the TCM, which converts it into vehicle speed.
The input speed sensor (primary speed sensor) detects the primary pulley revolution speed and sends the signal to the TCM.

DTC Logic

INFOID:0000000003849028

DTC DETECTION LOGIC

DTC	Item (CONSULT-III screen term)	Malfunction is detected when...	Possible cause
P1723	CVT SPD SEN/FNCTN	A rotation sensor error is detected when the gear does not change in accordance with the position of the stepping motor. **CAUTION:** **One of the "P0720 VEH SPD SEN/CIR AT", the "P0715 INPUT SPD SEN/CIRC" or the "P0725 ENGINE SPEED SIG" is displayed with the DTC at the same time.**	• Harness or connectors (Sensor circuit is open or shorted.) • Output speed sensor (secondary speed sensor) • Input speed sensor (primary speed sensor) • Engine speed signal system

DTC CONFIRMATION PROCEDURE

CAUTION:
Always drive vehicle at a safe speed.
NOTE:
Immediately after performing any "DTC CONFIRMATION PROCEDURE", always turn ignition switch OFF. Then wait at least 10 seconds before performing the next test.

1. CHECK DTC DETECTION

With CONSULT-III
1. Turn ignition switch ON.
2. Select "Data Monitor" mode for "TRANSMISSION".
3. Start engine and maintain the following conditions for at least 5 consecutive seconds.

VEHICLE SPEED	: 10 km/h (6 MPH) or more
ACC PEDAL OPEN	: More than 1.0/8
RANGE	: "D" position
ENG SPEED	: 450 rpm or more
Driving location	: Driving the vehicle uphill (increased engine load) will help maintain the driving conditions required for this test.

Is "P1723 CVT SPD SEN/FNCTN" detected?

YES >> Go to TM-91, "Diagnosis Procedure".
NO >> Check intermittent incident. Refer to GI-35, "Intermittent Incident".

Diagnosis Procedure

INFOID:0000000003849029

1. CHECK STEP MOTOR FUNCTION

Perform "Self-Diagnostic Results" mode for "TRANSMISSION".

Is "P1778 STEP MOTR/FNC" detected?

YES >> Repair or replace damaged parts. Refer to TM-100, "DTC Logic".
NO >> GO TO 2.

2. CHECK OUTPUT SPEED SENSOR (SECONDARY SPEED SENSOR) SYSTEM

Check output speed sensor (secondary speed sensor) system. Refer to TM-55, "DTC Logic".

Is the inspection result normal?

YES >> GO TO 3.
NO >> Repair or replace damaged parts.

3. CHECK INPUT SPEED SENSOR (PRIMARY SPEED SENSOR) SYSTEM

Check input speed sensor (primary speed sensor) system. Refer to TM-52, "DTC Logic".

Is the inspection result normal?

YES >> GO TO 4.
NO >> Repair or replace damaged parts.

4. CHECK ENGINE SPEED SIGNAL SYSTEM

Check engine speed signal system. Refer to TM-59, "DTC Logic".

Is the inspection result normal?

YES >> GO TO 5.
NO >> Repair or replace damaged parts.

5. DETECT MALFUNCTIONING ITEMS

Check TCM connector pin terminals for damage or loose connection with harness connector.

Is the inspection result normal?

YES >> Replace TCM. Refer to TM-153, "Exploded View".
NO >> Repair or replace damaged parts.

P1726 ELECTRIC THROTTLE CONTROL SYSTEM

Description

INFOID:0000000003849030

The electric throttle control actuator consists of throttle control motor, accelerator pedal position sensor, throttle position sensor, etc. The actuator sends the signal to the ECM, and ECM sends the signal to TCM via CAN communication.

DTC Logic

INFOID:0000000003849031

DTC DETECTION LOGIC

DTC	Item (CONSULT-III screen term)	Malfunction is detected when...	Possible cause
P1726	ELEC TH CONTROL	The electronically controlled throttle for ECM is malfunctioning.	Harness or connectors (Sensor circuit is open or shorted.)

DTC CONFIRMATION PROCEDURE

NOTE:
Immediately after performing any “DTC CONFIRMATION PROCEDURE”, always turn ignition switch OFF. Then wait at least 10 seconds before performing the next test.

1. CHECK DTC DETECTION

With CONSULT-III
1. Start engine and let it idle for 5 seconds.
2. Perform “Self-Diagnostic Results” mode for “TRANSMISSION”.

Is “P1726 ELEC TH CONTROL” detected?

YES >> Go to TM-93, "Diagnosis Procedure".
NO >> Check intermittent incident. Refer to GI-35, "Intermittent Incident".

Diagnosis Procedure

INFOID:0000000003849032

1. CHECK DTC WITH ECM

With CONSULT-III
1. Turn ignition switch ON.
2. Select “Self-Diagnostic Results” mode for “ENGINE”.

Is the inspection result normal?

YES >> GO TO 2.
NO >> Check DTC Detected Item. Refer to EC-389, "DTC Index".

2. CHECK DTC WITH TCM

With CONSULT-III
Perform “Self-Diagnostic Results” mode for “TRANSMISSION”.

Is “P1726 ELEC TH CONTROL” detected?

YES >> Replace TCM. Refer to TM-153, "Exploded View".
NO >> GO TO 3.

3. DETECT MALFUNCTIONING ITEMS

Check TCM connector pin terminals for damage or loose connection with harness connector.

Is the inspection result normal?

YES >> Replace TCM. Refer to TM-153, "Exploded View".
NO >> Repair or replace damaged parts.

P1740 LOCK-UP SELECT SOLENOID VALVE

Description

INFOID:0000000003849033

- The lock-up select solenoid valve controls lock-up clutch pressure or forward clutch pressure (reverse brake pressure).
- When controlling lock-up clutch, the valve is turned OFF. When controlling forward clutch, it is turned ON.

DTC Logic

INFOID:0000000003849034

DTC DETECTION LOGIC

DTC	Item (CONSULT-III screen term)	Malfunction is detected when...	Possible cause
P1740	LU-SLCT SOL/CIRC	• Normal voltage is not applied to solenoid due to cut line, short, etc. • TCM detects as irregular by comparing target value with monitor value.	• Harness or connectors (Solenoid circuit is open or shorted.) • Lock-up select solenoid valve

DTC CONFIRMATION PROCEDURE

CAUTION:
Always drive vehicle at a safe speed.
NOTE:
Immediately after performing any “DTC CONFIRMATION PROCEDURE”, always turn ignition switch OFF. Then wait at least 10 seconds before performing the next test.

1. CHECK DTC DETECTION

With CONSULT-III
1. Turn ignition switch ON.
2. Select “Data Monitor” mode for “TRANSMISSION”.
3. Start engine and maintain the following conditions for at least 5 consecutive seconds.

RANGE : “D”, “N” and “L” position
(At each time, wait for 5 seconds.)

With GST
Follow the procedure “With CONSULT-III”.

Is “P1740 LU-SLCT SOL/CIRC” detected?

YES >> Go to TM-94, "Diagnosis Procedure".
NO >> Check intermittent incident. Refer to GI-35, "Intermittent Incident".

Diagnosis Procedure

INFOID:0000000003849035

1. CHECK LOCK-UP SELECT SOLENOID VALVE CIRCUIT

1. Turn ignition switch OFF.
2. Disconnect TCM connector.
3. Check resistance between TCM vehicle side harness connector terminal and ground.

TCM vehicle side harness connector		Ground	Resistance (Approx.)
Connector	Terminal		
F23	37		6.0 – 19.0 Ω

Is the inspection result normal?

YES >> GO TO 5.
NO >> GO TO 2.

2. CHECK HARNESS BETWEEN TCM AND CVT UNIT (LOCK-UP SELECT SOLENOID VALVE) (PART 1)

1. Disconnect CVT unit connector.

2. Check continuity between TCM vehicle side harness connector terminal and CVT unit vehicle side harness connector terminal.

TCM vehicle side harness connector		CVT unit vehicle side harness connector		Continuity
Connector	Terminal	Connector	Terminal	
F23	37	F24	13	Existed

Is the inspection result normal?

YES >> GO TO 3.
NO >> Repair or replace damaged parts.

3. CHECK HARNESS BETWEEN TCM AND CVT UNIT (LOCK-UP SELECT SOLENOID VALVE) (PART 2)

Check continuity between TCM vehicle side harness connector terminal and ground.

TCM vehicle side harness connector		Ground	Continuity
Connector	Terminal		
F23	37		Not existed

Is the inspection result normal?

YES >> GO TO 4.
NO >> Repair or replace damaged parts.

4. CHECK LOCK-UP SELECT SOLENOID VALVE

Check lock-up select solenoid valve. Refer to TM-95, "Component Inspection (Lock-up Select Solenoid Valve)".

Is the inspection result normal?

YES >> GO TO 5.
NO >> Replace transaxle assembly. Refer to TM-168, "Exploded View".

5. DETECT MALFUNCTIONING ITEMS

Check TCM connector pin terminals for damage or loose connection with harness connector.

Is the inspection result normal?

YES >> Replace TCM. Refer to TM-153, "Exploded View".
NO >> Repair or replace damaged parts.

Component Inspection (Lock-up Select Solenoid Valve)

INFOID:0000000003849036

1. CHECK LOCK-UP SELECT SOLENOID VALVE

Check resistance between CVT unit connector terminal and ground.

CVT unit connector		Ground	Resistance (Approx.)
Connector	Terminal		
F24	13		6.0 – 19.0 Ω

Is the inspection result normal?

YES >> INSPECTION END
NO >> Replace transaxle assembly. Refer to TM-168, "Exploded View".

P1745 LINE PRESSURE CONTROL

Description

INFOID:0000000003849037

The pressure control solenoid valve A (line pressure solenoid valve) regulates the oil pump discharge pressure to suit the driving condition in response to the signal sent from the TCM.

DTC Logic

INFOID:0000000003849038

DTC DETECTION LOGIC

DTC	Item (CONSULT-III screen term)	Malfunction is detected when...	Possible cause
P1745	L/PRESS CONTROL	TCM detects the unexpected line pressure.	TCM

DTC CONFIRMATION PROCEDURE

NOTE:
Immediately after performing any “DTC CONFIRMATION PROCEDURE”, always turn ignition switch OFF. Then wait at least 10 seconds before performing the next test.

1. CHECK DTC DETECTION

With CONSULT-III

1. Turn ignition switch ON
2. Select “Data Monitor” mode for “TRANSMISSION”.
3. Make sure that output voltage of CVT fluid temperature sensor is within the range below.

ATF TEMP SEN : 1.0 – 2.0 V

If out of range, drive the vehicle to decrease the voltage (warm up the fluid) or stop engine to increase the voltage (cool down the fluid)

Is “P1745 L/PRESS CONTROL” detected?

YES >> Go to TM-96, "Diagnosis Procedure".
NO >> Check intermittent incident. Refer to GI-35, "Intermittent Incident".

Diagnosis Procedure

INFOID:0000000003849039

1. CHECK DTC

With CONSULT-III

1. Start engine.
2. Perform “Self-Diagnostic Results” mode for “TRANSMISSION”.

Is “P1745 L/PRESS CONTROL” detected?

YES >> Replace TCM. Refer to TM-153, "Exploded View".
NO >> Check intermittent incident. Refer to GI-35, "Intermittent Incident".

P1777 STEP MOTOR

Description

INFOID:0000000003849040

The step motor changes the step by turning 4 coils ON/OFF according to the signal from TCM. As a result, the flow of line pressure to primary pulley is changed and pulley ratio is controlled.

DTC Logic

INFOID:0000000003849041

DTC DETECTION LOGIC

DTC	Item (CONSULT-III screen term)	Malfunction is detected when...	Possible cause
P1777	STEP MOTR CIRC	Each coil of the step motor is not energized properly due to an open or a short.	• Harness or connectors (Step motor circuit is open or shorted.) • Step motor

DTC CONFIRMATION PROCEDURE

CAUTION:
Always drive vehicle at a safe speed.
NOTE:
If “DTC CONFIRMATION PROCEDURE” has been previously performed, always turn ignition switch OFF. Then wait at least 10 seconds before performing the next test.

1. CHECK DTC DETECTION

With CONSULT-III
1. Start engine.
2. Drive vehicle for at least 5 consecutive seconds.
3. Perform “Self-Diagnostic Results” mode for “TRANSMISSION”.

With GST
Follow the procedure “With CONSULT-III”.

Is “P1777 STEP MOTR CIRC” detected?

YES >> Go to TM-97, "Diagnosis Procedure".
NO >> Check intermittent incident. Refer to GI-35, "Intermittent Incident".

Diagnosis Procedure

INFOID:0000000003849042

1. CHECK STEP MOTOR CIRCUIT

1. Turn ignition switch OFF.
2. Disconnect TCM connector.
3. Check resistance between TCM vehicle side harness connector terminals.

TCM vehicle side harness connector			Resistance (Approx.)
Connector	Terminal		
F23	27	28	30.0 Ω
	29	30	

4. Check resistance between TCM vehicle side harness connector terminals and ground.

TCM vehicle side harness connector			Resistance (Approx.)
Connector	Terminal		
F23	27	Ground	15.0 Ω
	28		
	29		
	30		

Is the inspection result normal?

YES >> GO TO 5.
NO >> GO TO 2.

2. CHECK HARNESS BETWEEN TCM AND CVT UNIT (STEP MOTOR) (PART 1)

1. Disconnect CVT unit connector.
2. Check continuity between TCM vehicle side harness connector terminals and CVT unit vehicle side harness connector terminals.

TCM vehicle side harness connector		CVT unit vehicle side harness connector		Continuity
Connector	Terminal	Connector	Terminal	
F23	27	F24	9	Existed
	28		8	
	29		7	
	30		6	

Is the inspection result normal?

YES >> GO TO 3.
NO >> Repair or replace damaged parts.

3. CHECK HARNESS BETWEEN TCM AND CVT UNIT (STEP MOTOR) (PART 2)

Check continuity between TCM vehicle side harness connector terminals and ground.

TCM vehicle side harness connector			Continuity
Connector	Terminal		
F23	27	Ground	Not existed
	28		
	29		
	30		

Is the inspection result normal?

YES >> GO TO 4.
NO >> Repair or replace damaged parts.

4. CHECK STEP MOTOR

Check step motor. Refer to TM-98, "Component Inspection (Step Motor)".

Is the inspection result normal?

YES >> GO TO 5.
NO >> Replace transaxle assembly. Refer to TM-168, "Exploded View".

5. DETECT MALFUNCTIONING ITEMS

Check TCM connector pin terminals for damage or loose connection with harness connector.

Is the inspection result normal?

YES >> Replace TCM. Refer to TM-153, "Exploded View".
NO >> Repair or replace damaged parts.

Component Inspection (Step Motor)

INFOID:0000000003849043

1. CHECK STEP MOTOR

1. Check resistance between CVT unit connector terminals.

CVT unit connector			Resistance (Approx.)
Connector	Terminals		
F24	6	7	30.0 Ω
	8	9	

2. Check resistance between CVT unit connector terminals and ground.

CVT unit connector		Ground	Resistance (Approx.)
Connector	terminal		
F24	6	Ground	15.0 Ω
	7		
	8		
	9		

Is the inspection result normal?

YES >> INSPECTION END
NO >> Replace transaxle assembly. Refer to TM-168, "Exploded View".

P1778 STEP MOTOR - FUNCTION

Description

INFOID:0000000003849044

- The step motor changes the step by turning 4 coils ON/OFF according to the signal from TCM. As a result, the flow of line pressure to primary pulley is changed and pulley ratio is controlled.
- This diagnosis item is detected when the electrical system is OK, but the mechanical system is NG.
- This diagnosis item is detected when the state of the changing of the speed mechanism in the unit does not operate normally.

DTC Logic

INFOID:0000000003849045

DTC DETECTION LOGIC

DTC	Item (CONSULT-III screen term)	Malfunction is detected when...	Possible cause
P1778	STEP MOTR/FNC	There is a big difference between the number of steps for the stepping motor and for the actual gear ratio.	Step motor

DTC CONFIRMATION PROCEDURE

CAUTION:

- **Always drive vehicle at a safe speed.**
- **Before starting “DTC CONFIRMATION PROCEDURE”, confirm “Hi” or “Mid” or “Low” fixation by “PRI SPEED” and “VEHICLE SPEED” on “Data Monitor”.**
- **If hi-geared fixation occurred, go to TM-100, "Diagnosis Procedure".**

NOTE:

Immediately after performing any “DTC CONFIRMATION PROCEDURE”, always turn ignition switch OFF. Then wait at least 10 seconds before performing the next test.

1. CHECK DTC DETECTION

With CONSULT-III

1. Turn ignition switch ON.
2. Select “Data Monitor” mode for “TRANSMISSION”.
3. Make sure that output voltage of CVT fluid temperature sensor is within the range below.

ATF TEMP SEN	: 1.0 – 2.0 V

If it is out of range, drive the vehicle to decrease the voltage (warm up the fluid) or stop engine to increase the voltage (cool down the fluid)

4. Start engine and maintain the following conditions for at least 30 consecutive seconds.

Start test from 0 km/h (0 MPH)	
Constant acceleration	: Keep 30 sec or more
VEHICLE SPEED	: 10 km/h (6 MPH) or more
ACC PEDAL OPEN	: More than 1.0/8
RANGE	: “D” position
ENG SPEED	: 450 rpm or more

With GST

Follow the procedure “With CONSULT-III”.

Is “P1778 STEP MOTR/FNC” detected?

YES >> Go to TM-100, "Diagnosis Procedure".
NO >> Check intermittent incident. Refer to GI-35, "Intermittent Incident".

Diagnosis Procedure

INFOID:0000000003849046

1. CHECK STEP MOTOR SYSTEM

Check step motor system. Refer to TM-97, "Description".

Is the inspection result normal?

YES >> GO TO 2.
NO >> Repair or replace damaged parts.

2. CHECK INPUT SPEED SENSOR (PRIMARY SPEED SENSOR) SYSTEM

Check input speed sensor (primary speed sensor) system. Refer to TM-52, "Description".

Is the inspection result normal?

YES >> GO TO 3.
NO >> Repair or replace damaged parts.

3. CHECK OUTPUT SPEED SENSOR (SECONDARY SPEED SENSOR) SYSTEM

Check output speed sensor (secondary speed sensor) system. Refer to TM-55, "Description".

Is the inspection result normal?

YES >> GO TO 4.
NO >> Repair or replace damaged parts.

4. DETECT MALFUNCTIONING ITEMS

Check TCM connector pin terminals for damage or loose connection with harness connector.

Is the inspection result normal?

YES >> Replace TCM. Refer to TM-153, "Exploded View".
NO >> Repair or replace damaged parts.

SHIFT POSITION INDICATOR CIRCUIT

Description

INFOID:0000000003849047

- TCM sends position indicator signals to combination meter via CAN communication line.
- The selector lever position is indicated on the shift position indicator.

Component Function Check

INFOID:0000000003849048

1. CHECK SHIFT POSITION INDICATOR

CAUTION:
Always drive vehicle at a safe speed.

1. Start engine.
2. Check that correct selector lever position (“P”, “R”, “N”, “D”, “L”) is displayed as selector lever is moved into each position.

Is the inspection result normal?

YES >> INSPECTION END
NO >> Go to TM-102, "Diagnosis Procedure".

Diagnosis Procedure

INFOID:0000000003849049

1. CHECK INPUT SIGNALS

With CONSULT-III

1. Start engine.
2. Select “RANGE” on “Data Monitor” and read out the value.
3. Check that correct selector lever position (“P”, “R”, “N”, “D”, “L”) is displayed as selector lever is moved into each position.

Is the inspection result normal?

YES >> INSPECTION END
NO-1 (CVT position indicator does not indicate “L” when selector lever is moved into “L”.)>>Check the following.
- Check sport mode switch. Refer to TM-108, "Description".
- Check CVT main system (Fail-safe function actuated).
  - Perform “Self-Diagnostic Results” mode for “TRANSMISSION”.

NO-2 (The actual gear position changes, but the shift position indicator is not indicated.)>>Perform “Self-Diagnostic Results” mode for “TRANSMISSION”.
NO-3 (The actual gear position and the indication on the shift position indicator do not coincide.)>>Perform “Self-Diagnostic Results” mode for “TRANSMISSION”.
NO-4 (Only a specific position or positions is/are not indicated on the shift position indicator.)>>Check the combination meter. Refer to MWI-33, "CONSULT-III Function (METER/M&A)".

SHIFT LOCK SYSTEM

Description

INFOID:0000000003862436

Component	Function
Shift lock solenoid	It operates according to the signal from the stop lamp switch and moves the lock lever.
Lock lever	It moves according to the operation of the shift lock solenoid and performs the release of the shift lock.
Detent rod	It links with the selector button and restricts the selector lever movement.
Park position switch	It detects that the selector lever is in P position.
Shift lock release button	It moves the lock lever forcibly.

Wiring Diagram - CVT SHIFT LOCK SYSTEM -

INFOID:0000000003862437

CVT SHIFT LOCK SYSTEM

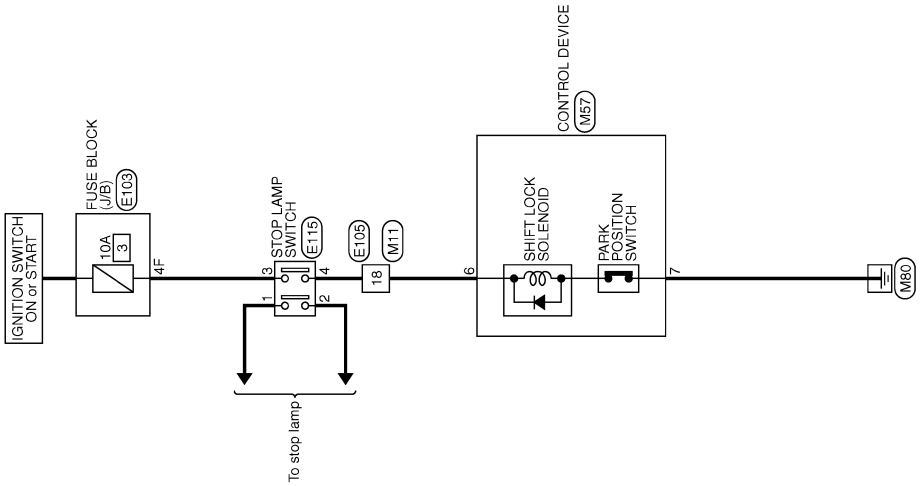

2008/01/23

JCDWM0253GI

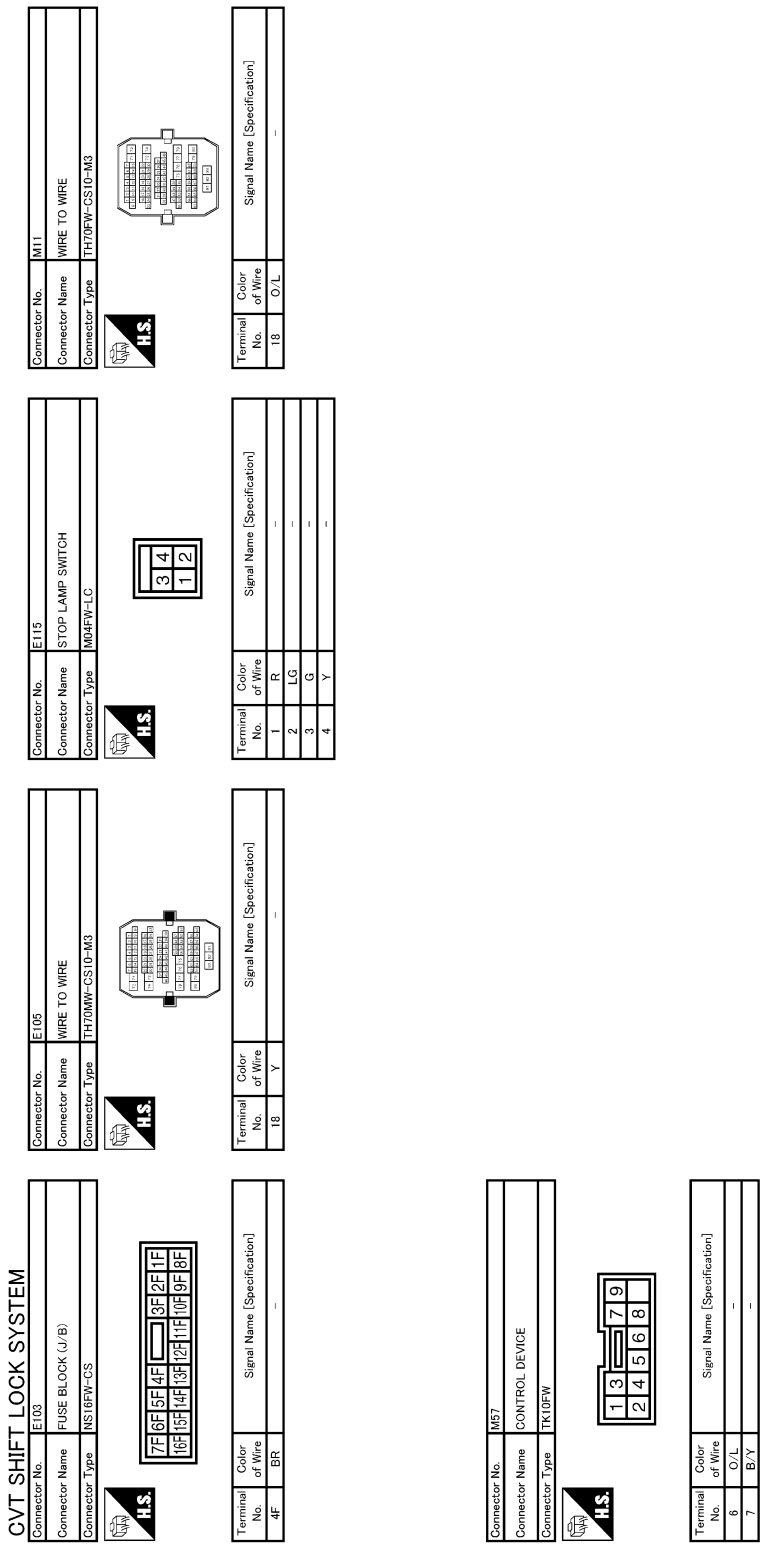

JCDWM0254GI

Component Function Check

INFOID:0000000003862438

1. CHECK CVT SHIFT LOCK OPERATION

1. Turn ignition switch ON.
2. Shift the selector lever to the “P” position.
3. Attempt to shift the selector lever to any other position with the brake pedal released.

Can the selector lever be shifted to any other position?

YES >> Go to TM-106, "Diagnosis Procedure".
NO >> GO TO 2.

2. CHECK CVT SHIFT LOCK OPERATION

Attempt to shift the selector lever to any other position with the brake pedal depressed.

Can the selector lever be shifted to any other position?

YES >> INSPECTION END
NO >> Go to TM-106, "Diagnosis Procedure".

Diagnosis Procedure

INFOID:0000000003862439

1. CHECK POWER SOURCE

1. Turn ignition switch ON.
2. Check voltage between stop lamp switch vehicle side harness connector and ground.

Stop lamp switch vehicle side harness connector		Ground	Voltage (Approx.)
Connector	Terminal		
E115	3		Battery Voltage

Is the inspection result normal?

YES >> GO TO 2.
NO >> Check the following.
- Harness for short or open between fuse block J/B connector terminal 4F and stop lamp switch harness connector terminal 3
- 10 A fuse [No. 3, located in the fuse block J/B]
- Ignition switch

2. CHECK STOP LAMP SWITCH

Check stop lamp switch. Refer to TM-107, "Component Inspection (Stop Lamp Switch)".

Is the inspection result normal?

YES >> GO TO 3.
NO >> Replace stop lamp switch. Refer to BR-17, "Exploded View".

3. CHECK HARNESS BETWEEN STOP LAMP SWITCH AND CONTROL DEVICE (PART 1)

1. Turn ignition switch OFF.
2. Disconnect stop lamp switch vehicle side harness connector and control device vehicle side harness connector.
3. Check continuity between stop lamp switch vehicle side harness connector terminal and control device vehicle side harness connector terminal.

Stop lamp switch vehicle side harness connector		Control device vehicle side harness connector		Continuity
Connector	Terminal	Connector	Terminal	
E115	4	M57	6	Existed

Is the inspection result normal?

YES >> GO TO 4.
NO >> Repair or replace damaged parts

4. CHECK HARNESS BETWEEN STOP LAMP SWITCH AND CONTROL DEVICE (PART 2)

Check continuity between stop lamp switch vehicle side harness connector terminal and ground.

Stop lamp switch vehicle side harness connector		Ground	Continuity
Connector	Terminal		
E115	4		Not existed

Is the inspection result normal?

YES >> GO TO 5.
NO >> Repair or replace damaged parts

5. CHECK GROUND CIRCUIT

Check continuity between control device vehicle side harness connector and ground.

Control device vehicle side harness connector		Ground	Continuity
Connector	Terminal		
M57	7		Existed

Is the inspection result normal?

YES >> GO TO 6.
NO >> Repair or replace damaged parts

6. CHECK CONTROL DEVICE

1. Shift selector lever to “P” position.
2. Check continuity between control device connector.

Control device connector			Continuity
Connector	Terminal		
M57	6	7	Existed

Is the inspection result normal?

YES >> INSPECTION END
NO >> Replace shift lock unit. Refer to TM-155, "Exploded View".

Component Inspection (Stop Lamp Switch)

INFOID:0000000003862440

1. CHECK STOP LAMP SWITCH

Check continuity between stop lamp switch connector terminals 3 and 4.

Stop lamp switch connector			Condition	Continuity
Connector	Terminal			
E115	3	4	Depressed brake pedal	Existed
			Released brake pedal	Not existed

Is the inspection result normal?

YES >> INSPECTION END
NO >> Replace stop lamp switch. Refer to BR-17, "Exploded View".

SPORT MODE SWITCH

Description

INFOID:0000000003858969

- The sport mode switch is installed to the selector lever knob.
- When pushing the sport mode switch (SPORT indicator lamp turns ON), the driving condition becomes sport mode. When pushing again the sport mode switch (SPORT indicator lamp turns OFF), the driving condition changes to D range.

Component Function Check

INFOID:0000000003858970

1.CHECK SPORT MODE SWITCH SIGNAL

1. Turn ignition switch ON.
2. Select “Data Monitor” mode for “TRANSMISSION”.
3. Check the On/Off operations of monitor item.

Monitor item	Condition	Status
SPORT MODE SW	While pushing sport mode switch	On
	Other conditions	Off

Is the inspection result normal?

YES >> INSPECTION END.
NO >> Go to TM-108, "Diagnosis Procedure".

Diagnosis Procedure

INFOID:0000000003858971

1. CHECK CAN COMMUNICATION CIRCUIT

Perform “Self Diagnostic Results” mode for “TRANSMISSION”.

Is “U1000 CAN COMM CIRCUIT” indicated?

YES >> Check CAN communication line. Refer to TM-41, "Description".
NO >> GO TO 2.

2.CHECK COMBINATION METER

Perform “Self Diagnostic Results” mode for “METER/M&A”.

Is the inspection result normal?

YES >> GO TO 3.
NO >> Check DTC detected item. Refer to MWI-67, "DTC Index".

3.CHECK SPORT MODE SWITCH CIRCUIT

1. Turn ignition switch OFF.
2. Disconnect control device connector.
3. Turn ignition switch ON.
4. Check voltage between control device vehicle side harness connector terminals.

Control device vehicle side harness connector			Voltage (Approx.)
Connector	Terminal		
	(+)	(–)	
M57	1	4	5 V

Is the inspection result normal?

YES >> GO TO 4.
NO >> GO TO 6.

4.CHECK SPORT MODE SWITCH

Check continuity between control device connector terminals.

Control device connector			Condition	Continuity
Connector	Terminal			
M57	1	4	While pushing sport mode switch	Existed
			Other condition	Not existed

Is the inspection result normal?

YES >> GO TO 5.
NO >> Repair or replace damaged parts.

5. CHECK MALFUNCTIONING ITEM

Check control device connector pin terminals for damage or loose connection with harness connector.

Is the inspection result normal?

YES >> GO TO 10.
NO >> Repair or replace damaged parts.

6. CHECK GROUND CIRCUIT

Check continuity between control device vehicle side harness connector terminal and ground.

Control device vehicle side harness connector		Ground	Continuity
Connector	Terminal		
M57	4		Existed

Is the inspection result normal?

YES >> GO TO 7.
NO >> Repair or replace damaged parts.

7. CHECK HARNESS BETWEEN CONTROL DEVICE AND COMBINATION METER (PART 1)

1. Turn ignition switch OFF.
2. Disconnect combination meter connector.
3. Check continuity between control device vehicle side harness connector terminal and combination meter vehicle side harness connector terminal.

Control device vehicle side harness connector		Combination meter vehicle side harness connector		Continuity
Connector	Terminal	Connector	Terminal	
M57	1	M34	32	Existed

Is the inspection result normal?

YES >> GO TO 8.
NO >> Repair or replace damaged parts.

8. CHECK HARNESS BETWEEN CONTROL DEVICE AND COMBINATION METER (STEP 2)

Check continuity between control device vehicle side harness connector terminal and ground.

Control device vehicle side harness connector		Ground	Continuity
Connector	Terminal		
M57	1		Not existed

Is the inspection result normal?

YES >> GO TO 9.
NO >> Repair or replace damaged parts.

9. DETECT MALFUNCTIONING ITEMS

Check combination meter connector pin terminals for damage or loose connection with harness connector.

Is the inspection result normal?

YES >> GO TO 10.
NO >> Repair or replace damaged parts.

10. CHECK COMBINATION METER

1. Reconnect all the connectors.
2. Turn ignition switch ON.
3. Select “SPORT MODE SW” on “Data Monitor” mode for “METER/M&A”, and check the On/Off operations of monitor item. Refer to MWI-53, "Reference Value".

Is the inspection result normal?

YES >> GO TO 11.
NO >> Replace combination meter. Refer to MWI-126, "Exploded View".

11. DETECT MALFUNCTIONING ITEMS

Check TCM connector pin terminals for damage or loose connection with harness connector.

Is the inspection result normal?

YES >> Replace TCM. Refer to TM-153, "Exploded View".
NO >> Repair or replace damaged parts.

ECU DIAGNOSIS

TCM

Reference Value

INFOID:0000000003849059

VALUES ON THE DIAGNOSIS TOOL

Item name	Condition	Display value (Approx.)
VSP SENSOR	During driving	Approximately matches the speedometer reading.
ESTM VSP SIG	During driving	Approximately matches the speedometer reading.
PRI SPEED SEN	During driving (lock-up ON)	Approximately matches the engine speed.
ENG SPEED SIG	Engine running	Closely matches the tachometer reading.
SEC HYDR SEN	“N” position idle	0.5 - 0.8 V
PRI HYDR SEN	“N” position idle	0.7 - 3.5 V
ATFTEMP COUNT*	When CVT fluid temperature is 20°C (68°F).	47
	When CVT fluid temperature is 80°C (176°F).	161
VIGN SEN	Ignition switch: ON	Battery voltage
VEHICLE SPEED	During driving	Approximately matches the speedometer reading.
PRI SPEED	During driving (lock-up ON)	Approximately matches the engine speed.
SEC SPEED	During driving	50 X Approximately matches the speedometer reading.
ENG SPEED	Engine running	Closely matches the tachometer reading.
GEAR RATIO	During driving	2.37 - 0.43
ACC PEDAL OPEN	Released accelerator pedal - Fully depressed accelerator pedal	0.0/8 - 8.0/8
SEC PRESS	“N” position idle	0.5 - 0.9 MPa
PRI PRESS	“N” position idle	0.3 - 0.9 MPa
STM STEP	During driving	-20 step – 190 step
ISOLT1	Lock-up OFF	0.0 A
	Lock-up ON	0.7 A
ISOLT2	Release your foot from the accelerator pedal.	0.8 A
	Press the accelerator pedal all the way down.	0.0 A
ISOLT3	Secondary pressure low - Secondary pressure high.	0.8 - 0.0 A
SOLMON1	Lock-up OFF	0.0 A
	Lock-up ON	0.6 - 0.7 A
SOLMON2	“N” position idle	0.8 A
	When stalled	0.3 - 0.6 A
SOLMON3	“N” position idle	0.6 - 0.7 A
	When stalled	0.4 - 0.6 A
INH SW3M	Selector lever in “D” and “L” positions	On
	Selector lever in “P”, “R” and “N” positions	Off
INH SW4	Selector lever in “R” and “D” positions	On
	Selector lever in “P”, “N” and “L” positions	Off

Item name	Condition	Display value (Approx.)
INH SW3	Selector lever in “D” and “L” positions	On
	Selector lever in “P”, “R” and “N” positions	Off
INH SW2	Selector lever in “N”, “D” and “L” positions	On
	Selector lever in “P” and “R” positions	Off
INH SW1	Selector lever in “R”, “N” and “D” positions	On
	Selector lever in “P” and “L” positions	Off
BRAKE SW	Depressed brake pedal	On
	Released brake pedal	Off
FULL SW	Fully depressed accelerator pedal	On
	Released accelerator pedal	Off
IDLE SW	Released accelerator pedal	On
	Fully depressed accelerator pedal	Off
SPORT MODE SW	While pushing sport mode switch	On
	Other conditions	Off
INDLRNG	Selector lever in “L” position	On
	Selector lever in other positions	Off
INDDRNG	Selector lever in “D” position	On
	Selector lever in other positions	Off
INDNRNG	Selector lever in “N” position	On
	Selector lever in other positions	Off
INDRRNG	Selector lever in “R” position	On
	Selector lever in other positions	Off
INDPRNG	Selector lever in “P” position	On
	Selector lever in other positions	Off
SPORT MODE IND	When sport mode	On
	Other conditions	Off
SMCOIL D	During driving	Changes ON ⇔ OFF.
SMCOIL C	During driving	Changes ON ⇔ OFF.
SMCOIL B	During driving	Changes ON ⇔ OFF.
SMCOIL A	During driving	Changes ON ⇔ OFF.
LUSEL SOL OUT	Selector lever in “P” and “N” positions	On
	Wait at least for 5 seconds with the selector lever in “R”, “D” and “L” positions	Off
LUSEL SOL MON	Selector lever in “P” and “N” positions	On
	Wait at least for 5 seconds with the selector lever in “R”, “D” and “L” positions	Off
STRTR RLY OUT	Selector lever in “P” and “N” positions	On
	Selector lever in other positions	Off
STRTR RLY MON	Selector lever in “P” and “N” positions	On
	Selector lever in other positions	Off
VDC ON	VDC operate	On
	Other conditions	Off
TCS ON	TCS operate	On
	Other conditions	Off

Item name	Condition	Display value (Approx.)
ABS ON	ABS operate	On
	Other conditions	Off
RANGE	Selector lever in “N” and “P” positions.	N·P
	Selector lever in “R” position.	R
	Selector lever in “D” position.	D
	Selector lever in “L” position.	L

* Means CVT fluid temperature. Convert numerical values for actual fluid temperature °C (°F). Refer to TM-139, "ATFTEMP COUNT Conversion Table".

TERMINAL LAYOUT

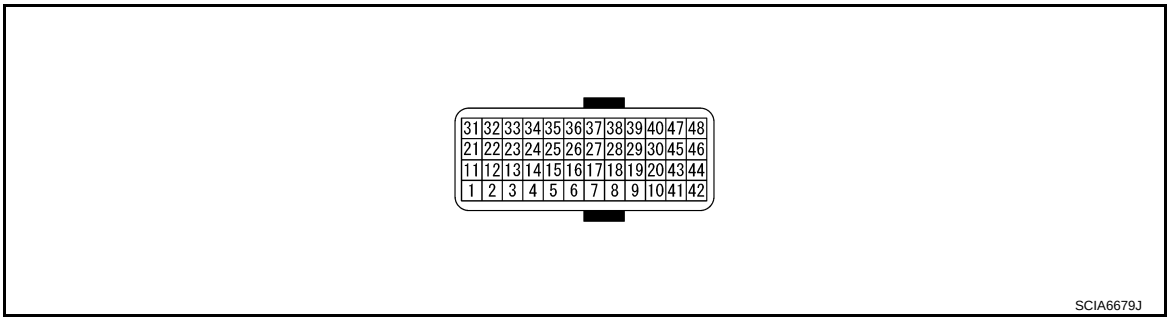

PHYSICAL VALUES

Terminal No. (Wire color)		Description		Condition		Value (Approx.)
+	-	Signal name	Input/Output			
1 (P/B)	Ground	PNP switch 2	Input	Ignition switch ON	Selector lever in “N” and “D” and “L” positions	0 V
					Selector lever in other positions	10.0 V – Battery voltage
2 (P/L)	Ground	PNP switch 3	Input		Selector lever in “D” and “L” positions	0 V
					Selector lever in other positions	10.0 V – Battery voltage
3 (G/O)	Ground	PNP switch 4	Input		Selector lever in “R” and “D” positions	0 V
					Selector lever in other positions	10.0 V – Battery voltage
4 (GR)	Ground	PNP switch 3 (monitor)	Input		Selector lever in “D” and “L” positions	0 V
					Selector lever in other positions	10.0 V – Battery voltage
5 (B)	Ground	Ground	Output	Always		0 V
6 (O)	Ground	K-LINE	Input/Output	—		—
7 (W)	Ground	Sensor ground	Output	Always		0 V
8 (G/W)	—	CLOCK (SEL2)	—	—		—

Terminal No. (Wire color)		Description		Condition		Value (Approx.)
+	-	Signal name	Input/Output			
9 (L/R)	—	CHIP SELECT (SEL1)	—	—		—
10 (BR/R)	—	DATA I/O (SEL3)	—	—		—
11 (BR/W)	Ground	PNP switch 1	Input	Ignition switch ON	Selector lever in “R”, “N” and “D” positions	0 V
					Selector lever in other positions	Battery voltage
13 (V)	Ground	CVT fluid temperature sensor	Input	Ignition switch ON	When CVT fluid temperature is 20°C (68°F)	1.9 – 2.2 V
					When CVT fluid temperature is 80°C (176°F)	0.8 – 1.1 V
14 (R/W)	Ground	Transmission fluid pressure sensor B (Primary pressure sensor)	Input	“N” position idle		0.5 – 0.8 V
15 (V/W)	Ground	Transmission fluid pressure sensor A (Secondary pressure sensor)	Input			1.0 – 1.5 V
19 (G/B)	Ground	Reverse lamp relay	Output	Ignition switch ON	Selector lever in “R” position	0 V
					Selector lever in other positions	Battery voltage
20 (R/B)	Ground	Starter relay	Output	Ignition switch ON	Selector lever in “N”, “P” positions	Battery voltage
					Selector lever in other positions	0 V
25 (W/R)	Ground	Sensor ground	Output	Always		0 V
26 (L/O)	Ground	Sensor power	Output	Ignition switch ON	—	4.75 – 5.25 V
				Ignition switch OFF	—	0 V
27 (R/G)	Ground	Step motor D	Output	Within 2 seconds after ignition switch ON, measure the time using the pulse width measurement function (Hi level) of CONSULT-III.* **CAUTION: Connect the diagnosis data link cable to the vehicle diagnosis connector.**		10.0 msec
28 (R)	Ground	Step motor C	Output			30.0 msec
29 (O/B)	Ground	Step motor B	Output			10.0 msec
30 (G/R)	Ground	Step motor A	Output			30.0 msec
31 (P)	—	CAN-L	Input/Output	—		—
32 (L)	—	CAN-H	Input/Output	—		—
33 (LG)	Ground	Input speed sensor (Primary speed sensor)	Input	When driving at 20 km/h (12 MPH) in “L” position, use the CONSULT-III pulse frequency measuring function.		680 Hz
34 (LG/R)	Ground	Output speed sensor (Secondary speed sensor)	Input	When driving at 20 km/h (12 MPH) in “D” position, use the CONSULT-III pulse frequency measuring function.		400 Hz
37 (V/R)	Ground	Lock-up select solenoid valve	Output	Ignition switch ON	Selector lever in “P”, “N” positions	Battery voltage
					Wait at least for 5 seconds with the selector lever in “R”, “D” and “L” positions.	0 V

Terminal No. (Wire color)		Description		Condition		Value (Approx.)
+	-	Signal name	Input/Output			
38 (L/W)	Ground	Torque converter clutch solenoid valve	Output	When vehicle drive in “D” position	When CVT performs lock-up	6.0 V
					When CVT does not perform lock-up	1.0 V
39 (W/B)	Ground	Pressure control solenoid valve B (Secondary pressure solenoid valve)	Output	“N” positions idle	Release your foot from the accelerator pedal.	5.0 – 7.0 V
					Press the accelerator pedal all the way down.	3.0 – 4.0 V
40 (R/Y)	Ground	Pressure control solenoid valve A (Line pressure solenoid valve)	Output		Release your foot from the accelerator pedal.	5.0 – 7.0 V
					Press the accelerator pedal all the way down.	1.0 – 3.0 V
42 (B)	Ground	Ground	Output	Always		0 V
45 (L/R)	Ground	Power supply (memory back-up)	Input	Always		Battery voltage
46 (Y)	Ground	Power supply	Output	Ignition switch ON	—	Battery voltage
				Ignition switch OFF	—	0 V
47 (L/R)	Ground	Power supply (memory back-up)	Input	Always		Battery voltage
48 (Y)	Ground	Power supply	Output	Ignition switch ON	—	Battery voltage
				Ignition switch OFF	—	0 V

*: A circuit tester cannot be used to test this item.

Wiring Diagram - CVT CONTROL SYSTEM -

INFOID:0000000003849060

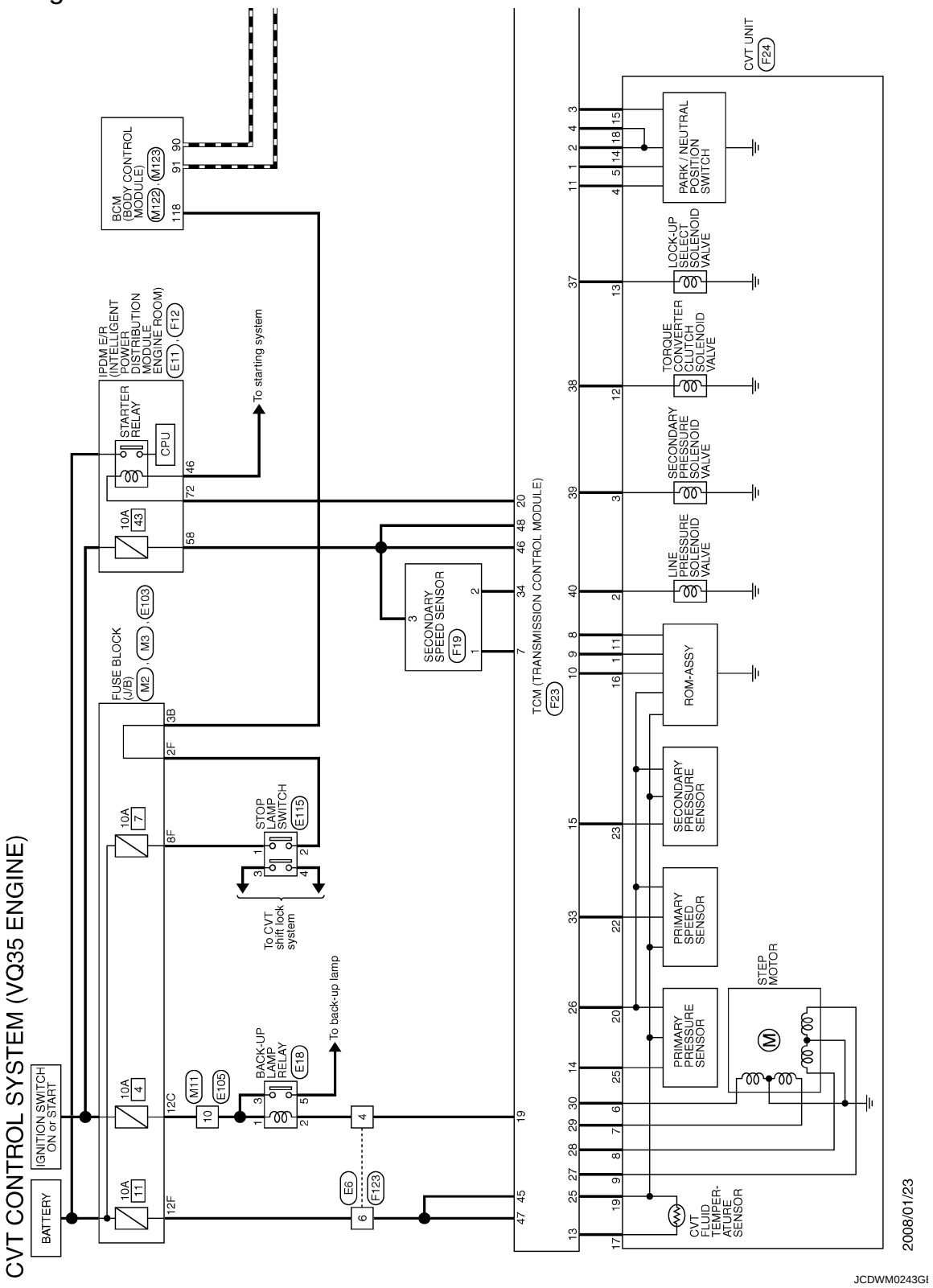

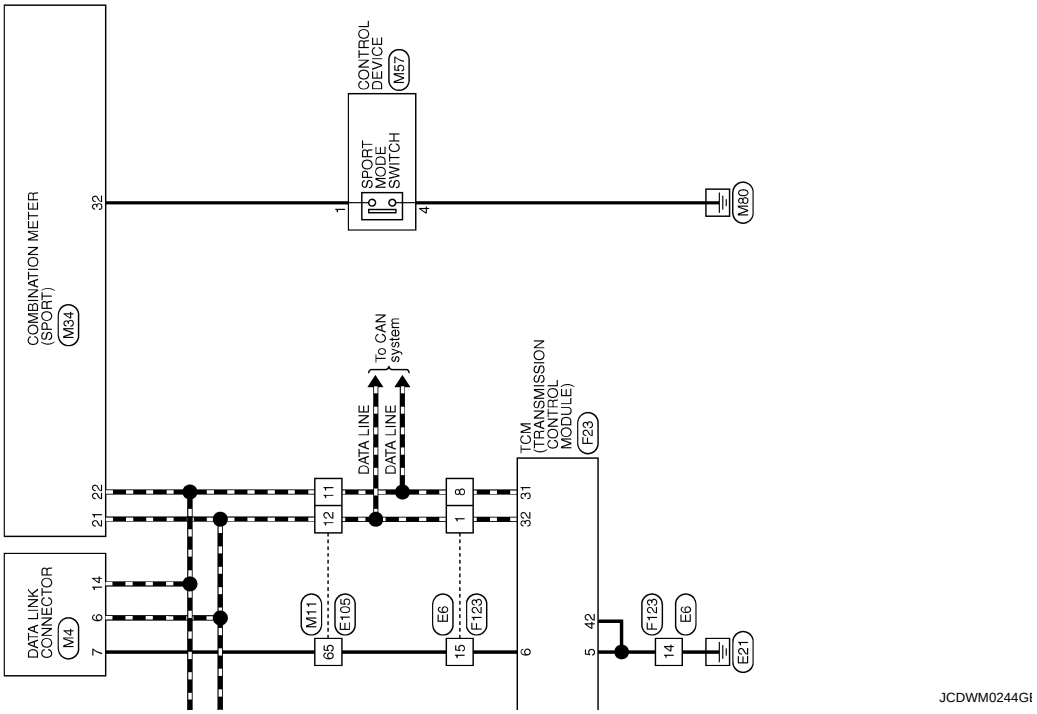
COMBINATION METER (SPORT)
M34
32
22
21
DATA LINK CONNECTOR
M4
14
6
7
CONTROL DEVICE
M57
SPORT MODE SWITCH
1
4
M80
To CAN system
DATA LINE
DATA LINE
TCM (TRANSMISSION CONTROL MODULE)
F23
11
12
8
1
31
32
M11
E105
65
E6
F123
15
6
42
5
F123
E6
14
E21
JCDWM0244GI

CVT CONTROL SYSTEM (VQ35 ENGINE)

Connector No.	E6
Connector Name	WIRE TO WIRE
Connector Type	TK16MGY-1V

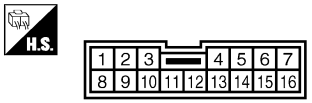

Terminal No.	Color of Wire	Signal Name [Specification]
1	L	–
4	R	–
6	V	–
8	P	–
14	B/W	–
15	O	–

Connector No.	E11
Connector Name	IPDM E/R (INTELLIGENT POWER DISTRIBUTION MODULE ENGINE ROOM)
Connector Type	TH08FW-NH

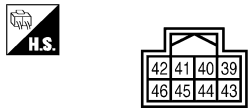

Terminal No.	Color of Wire	Signal Name [Specification]
46	BR	–

Connector No.	E18
Connector Name	BACK-UP LAMP RELAY
Connector Type	MS02FL-M2-LC

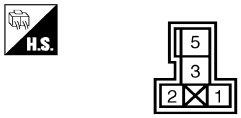

Terminal No.	Color of Wire	Signal Name [Specification]
1	LG	–
2	R	–
3	LG	–
5	R	–

Connector No.	E103
Connector Name	FUSE BLOCK (J/B)
Connector Type	NS16FW-CS

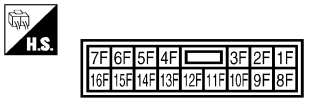

Terminal No.	Color of Wire	Signal Name [Specification]
2F	LG	–
8F	R	–
12F	V	–

Connector No.	E105
Connector Name	WIRE TO WIRE
Connector Type	TH70MW-CS10-M3

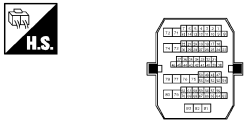

Terminal No.	Color of Wire	Signal Name [Specification]
10	LG	–
11	P	–
12	L	–
65	O	–

Connector No.	E115
Connector Name	STOP LAMP SWITCH
Connector Type	M04FW-LC

Terminal No.	Color of Wire	Signal Name [Specification]
1	R	–
2	LG	–
3	G	–
4	Y	–

Connector No.	F12
Connector Name	IPDM E/R (INTELLIGENT POWER DISTRIBUTION MODULE ENGINE ROOM)
Connector Type	TH20FW-CS12-M4

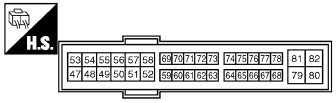

Terminal No.	Color of Wire	Signal Name [Specification]
58	Y	–
72	R/B	–

Connector No.	F19
Connector Name	SECONDARY SPEED SENSOR
Connector Type	RK03FB

Terminal No.	Color of Wire	Signal Name [Specification]
1	W	–
2	LG/R	–
3	Y	–

JCDWM0245GI

CVT CONTROL SYSTEM (VQ35 ENGINE)

Connector No.	F23
Connector Name	TCM (TRANSMISSION CONTROL MODULE)
Connector Type	RH40FB-RZ8-L-RH

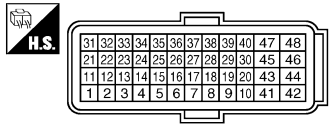

Terminal No.	Color of Wire	Signal Name [Specification]
1	P/B	INH SW 2 [With VQ35 engine]
2	P/L	INH SW 3 [With VQ35 engine]
3	G/O	INH SW 4 [With VQ35 engine]
4	GR	INH SW 3 MON [With VQ35 engine]
5	B	GND
6	O	K-LINE
7	W	SENSOR GND
8	G/W	CLOCK (SEL2)
9	L/R	CHIP SELECT (SEL1)
10	BR/R	DATA I/O (SEL3)
11	BR/W	INH SW 1 [With VQ35 engine]
13	V	CVT FLUID TEMP SENSOR [With VQ35 engine]
14	R/W	PRIMARY PRESSURE SENSOR
15	V/W	SECONDARY PRESSURE SENSOR [With VQ35 engine]
19	G/B	REV LAMP RELAY
20	R/B	STARTER RELAY
25	W/R	SENSOR GND
26	L/O	SENSOR POWER SOURCE(5V)
27	R/G	STEP MOTOR D [With VQ35 engine]
28	R	STEP MOTOR C [With VQ35 engine]
29	O/B	STEP MOTOR B [With VQ35 engine]
30	G/R	STEP MOTOR A [With VQ35 engine]
31	P	CAN-L
32	L	CAN-H
33	LG	PRIMARY SPEED SENSOR [With VQ35 engine]
34	LG/R	SECONDARY SPEED SENSOR [With VQ35 engine]
37	V/R	L/U SELECT SOLENOID VALVE [With VQ35 engine]
38	L/W	TORQE CONVERTER CLUTCH SOLENOID VALVE [With VQ35 engine]
39	W/B	SECONDARY PRESSURE SOLENOID VALVE [With VQ35 engine]
40	R/Y	LINE PRESSURE SOLENOID VALVE [With VQ35 engine]
42	B	GND
45	L/R	BATT
46	Y	VIGN
47	L/R	BATT
48	Y	VIGN

Connector No.	F24
Connector Name	CVT UNIT
Connector Type	Yazaki 7283-8750-30

Terminal No.	Color of Wire	Signal Name [Specification]
1	L/R	–
2	R/Y	–
3	W/B	–
4	BR/W	–
5	P/B	–
6	G/R	–
7	O/B	–
8	R	–
9	R/G	–
11	G/W	–
12	L/W	–
13	V/R	–
14	P/L	–
15	G/O	–
16	BR/R	–
17	V	–
18	GR	–
19	W/R	–
20	L/O	–
22	LG	–
23	V/W	–
25	R/W	–

Connector No.	F123
Connector Name	WIRE TO WIRE
Connector Type	TK16FGY-1V

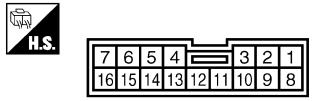

Terminal No.	Color of Wire	Signal Name [Specification]
1	L	–
4	G/B	–
6	L/R	–
8	P	–
14	B	–
15	O	–

Connector No.	M2
Connector Name	FUSE BLOCK (J/B)
Connector Type	NS10FW-CS

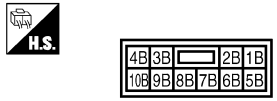

Terminal No.	Color of Wire	Signal Name [Specification]
3B	O/L	–

Connector No.	M3
Connector Name	FUSE BLOCK (J/B)
Connector Type	NS12FW-CS

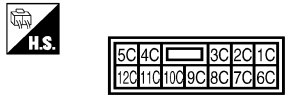

Terminal No.	Color of Wire	Signal Name [Specification]
12C	O	–

Connector No.	M4
Connector Name	DATA LINK CONNECTOR
Connector Type	BD16FW

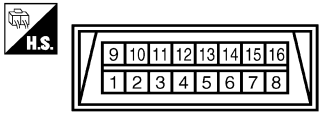

Terminal No.	Color of Wire	Signal Name [Specification]
6	L	–
7	O	–
14	P	–

JCDWM0246GI

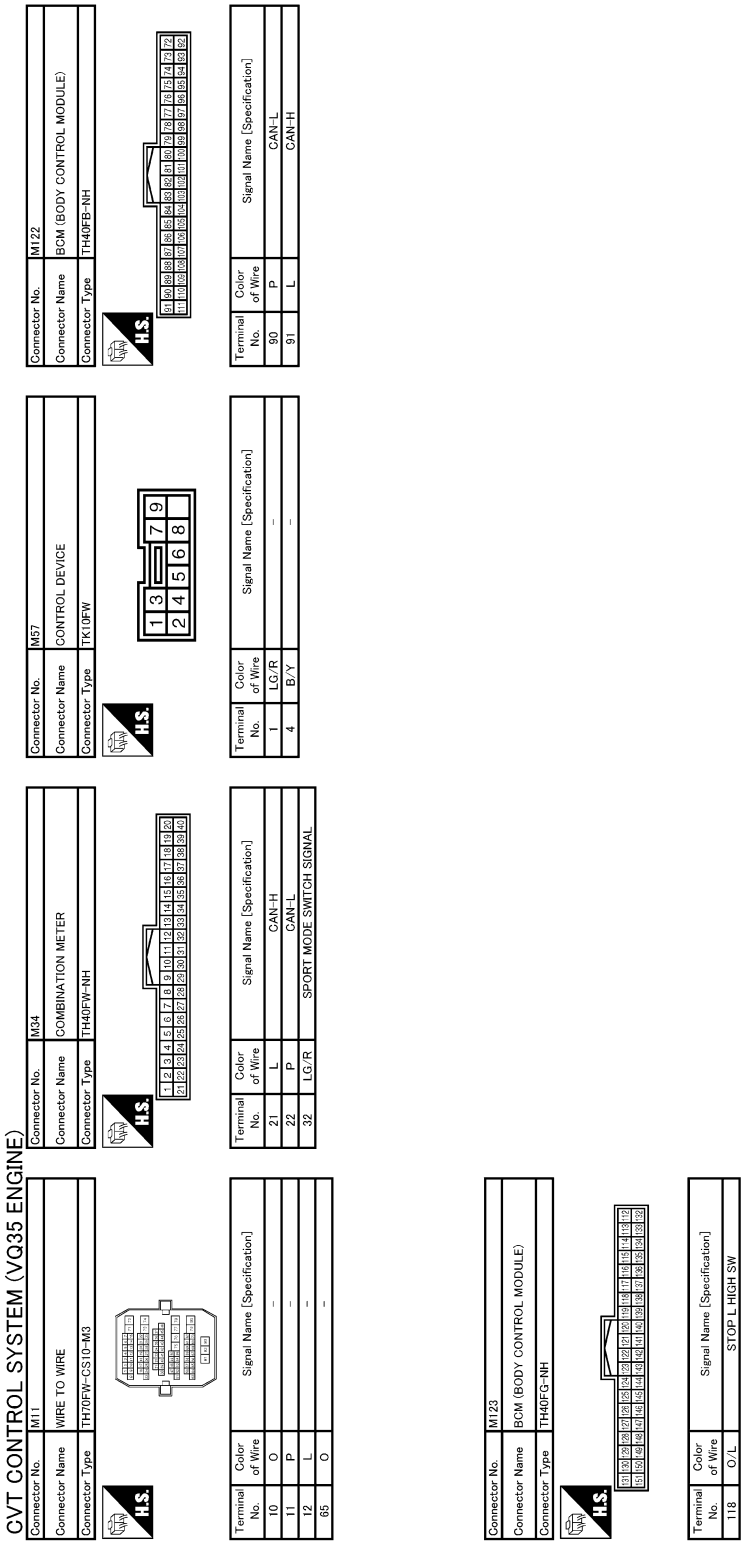

Fail-safe

INFOID:0000000003849061

The TCM has an electrical fail-safe mode. In this mode TCM operates even if there is an error in a main electronic control input/output signal circuit.

FAIL-SAFE FUNCTION

If any malfunction occurs in a sensor or solenoid valve, this function controls the CVT to make driving possible.

Output Speed Sensor (Secondary Speed Sensor)
The shift pattern is changed in accordance with the throttle position when an unexpected signal is sent from the output speed sensor (secondary speed sensor) to the TCM. The sport mode is inhibited, and the transaxle is put in “D”.

Input Speed Sensor (Primary Speed Sensor)
The shift pattern is changed in accordance with the throttle position and secondary speed (vehicle speed) when an unexpected signal is sent from the input speed sensor (primary speed sensor) to the TCM. The sport mode is inhibited, and the transaxle is put in “D”.

PNP Switch
If an unexpected signal is sent from the PNP switch to the TCM, the transaxle is put in “D”.

CVT Fluid Temperature Sensor
If an unexpected signal is sent from the CVT fluid temperature sensor to the TCM, the gear ratio in use before receiving the unexpected signal is maintained or the gear ratio is controlled to keep engine speed under 5,000 rpm.

Transmission Fluid Pressure Sensor A (Secondary Pressure Sensor)
- If an unexpected signal is sent from the transmission fluid pressure sensor A (secondary pressure sensor) to the TCM, the secondary pressure feedback control is stopped and the offset value obtained before the non-standard condition occurs is used to control line pressure.
- If transmission fluid pressure sensor A (secondary pressure sensor) error signal is inputted to the TCM, secondary pressure feedback control stops, but line pressure is controlled normally.

Pressure Control Solenoid A (Line Pressure Solenoid Valve)
If an unexpected signal is sent from the solenoid valve to the TCM, the pressure control solenoid A (line pressure solenoid valve) is turned OFF to achieve the maximum fluid pressure.

Pressure Control Solenoid B (Secondary Pressure Solenoid Valve)
If an unexpected signal is sent from the solenoid valve to the TCM, the pressure control solenoid B (secondary pressure solenoid valve) is turned OFF to achieve the maximum fluid pressure.

Torque Converter Clutch Solenoid Valve
If an unexpected signal is sent from the solenoid valve to the TCM, the torque converter clutch solenoid valve is turned OFF to cancel the lock-up.

Step Motor
If an unexpected signal is sent from the step motor to the TCM, the step motor coil phases “A” through “D” are all turned OFF to hold the gear ratio used just before the non-standard condition occurred.

CVT Lock-up Select Solenoid Valve
If an unexpected signal is sent from the solenoid valve to the TCM, the CVT lock-up select solenoid valve is turned OFF to cancel the lock-up.

TCM Power Supply (Memory Back-up)
Transaxle assembly is protected by limiting the engine torque when the memory back-up power supply (for controlling) from the battery is not supplied to the TCM. Normal status is restored when turning the ignition switch OFF to ON after the normal power supply.

DTC Inspection Priority Chart

INFOID:0000000003849062

If some DTCs are displayed at the same time, perform inspections one by one based on the following priority chart.

NOTE:
If DTC “U1000 CAN COMM CIRCUIT” is indicated with other DTCs, start from a diagnosis for “DTC U1000 CAN COMMUNICATION LINE”. Refer to TM-41.

Priority	Detected items (DTC)
1	U1000 CAN communication line
2	Except above

DTC Index

INFOID:0000000003849063

NOTE:

If DTC "U1000 CAN COMM CIRCUIT" is indicated with other DTCs, start from a diagnosis for "DTC U1000 CAN COMMUNICATION LINE". Refer to TM-41.

DTC*1		Items (CONSULT-III screen terms)	Reference
MIL*2, "ENGINE" with CONSULT-III or GST	CONSULT-III only "TRANSMISSION"		
—	P0615	STARTER RELAY/CIRC	TM-42
—	P0703	BRAKE SW/CIRC	TM-44
P0705	P0705	PNP SW/CIRC	TM-47
P0710	P0710	ATF TEMP SEN/CIRC	TM-50
P0715	P0715	INPUT SPD SEN/CIRC	TM-52
P0720	P0720	VEH SPD SEN/CIR AT	TM-55
—	P0725	ENGINE SPEED SIG	TM-59
—	P0730	BELT DAMG	TM-60
P0740	P0740	TCC SOLENOID/CIRC	TM-62
P0744	P0744	A/T TCC S/V FNCTN	TM-64
P0745	P0745	L/PRESS SOL/CIRC	TM-66
P0746	P0746	PRS CNT SOL/A FCTN	TM-68
P0776	P0776	PRS CNT SOL/B FCTN	TM-70
P0778	P0778	PRS CNT SOL/B CIRC	TM-72
P0840	P0840	TR PRS SENS/A CIRC	TM-74
—	P0841	PRESS SEN/FNCTN	TM-77
P0845	P0845	TR PRS SENS/B CIRC	TM-80
—	P0868	SEC/PRESS DOWN	TM-83
—	P1701	TCM-POWER SUPPLY	TM-85
—	P1705	TP SEN/CIRC A/T	TM-88
—	P1722	ESTM VEH SPD SIG	TM-89
—	P1723	CVT SPD SEN/FNCTN	TM-91
—	P1726	ELEC TH CONTROL	TM-93
P1740	P1740	LU-SLCT SOL/CIRC	TM-94
—	P1745	L/PRESS CONTROL	TM-96
P1777	P1777	STEP MOTR CIRC	TM-97
P1778	P1778	STEP MOTR/FNC	TM-100
U1000	U1000	CAN COMM CIRCUIT	TM-41

- *1: These numbers are prescribed by ISO 15031-6.
- *2: Refer to TM-35, "Diagnosis Description".

SYMPTOM DIAGNOSIS

SYSTEM SYMPTOM

Symptom Table

INFOID:0000000003849064

The diagnostics item numbers show the sequence for inspection. Inspect in order from item 1.

No.	Item	Symptom	Condition	Diagnostic item	Reference
1	Shift Shock	Large shock. (“N”→ “D” position)	ON vehicle	1. Engine idle speed	EC-14
				2. Engine speed signal	TM-59
				3. Accelerator pedal position sensor	TM-88
				4. CVT position	TM-152
				5. CVT fluid temperature sensor	TM-50
				6. CAN communication line	TM-41
				7. CVT fluid level and state	TM-142
				8. Line pressure test	TM-146
				9. Torque converter clutch solenoid valve	TM-62
				10. Lock-up select solenoid valve	TM-94
				11. PNP switch	TM-44
			OFF vehicle	12. Forward clutch	TM-168
				13. Control valve	
2		Large shock. (“N”→ “R” position)	ON vehicle	1. Engine idle speed	EC-14
				2. Engine speed signal	EC-14
				3. Accelerator pedal position sensor	TM-88
				4. CVT position	TM-152
				5. CVT fluid temperature sensor	TM-50
				6. CAN communication line	TM-41
				7. CVT fluid level and state	TM-142
				8. Line pressure test	TM-146
				9. Torque converter clutch solenoid valve	TM-62
				10. Lock-up select solenoid valve	TM-94
				11. PNP switch	TM-44
			OFF vehicle	12. Reverse brake	TM-168
				13. Control valve	
3		Shock is too large for lock-up.	ON vehicle	1. CVT position	TM-152
				2. Engine speed signal	TM-59
				3. CAN communication line	TM-41
				4. CVT fluid level and state	TM-142
			OFF vehicle	5. Torque converter	TM-172
				6. Control valve	TM-168

No.	Item	Symptom	Condition	Diagnostic item	Reference
4	Slips/Will Not Engage	Vehicle cannot take off from “D” position.	ON vehicle	1. CVT fluid level and state	TM-142
				2. CVT position	TM-152
				3. CAN communication line	TM-41
				4. Line pressure test	TM-146
				5. Stall test	TM-144
				6. Step motor	TM-97
				7. Primary speed sensor	TM-52
				8. Secondary speed sensor	TM-55
				9. Accelerator pedal position sensor	TM-88
				10. CVT fluid temperature sensor	TM-50
				11. Secondary pressure sensor	TM-74
				12. TCM power supply and ground	TM-85
			OFF vehicle	13. Oil pump assembly	TM-168
				14. Forward clutch	
				15. Control valve	
				16. Parking components	
5		Vehicle cannot take off from “R” position.	ON vehicle	1. CVT fluid level and state	TM-142
				2. CVT position	TM-152
				3. CAN communication line	TM-41
				4. Line pressure test	TM-146
				5. Stall test	TM-144
				6. Step motor	TM-97
				7. Primary speed sensor	TM-52
				8. Secondary speed sensor	TM-55
				9. Accelerator pedal position sensor	TM-88
				10. CVT fluid temperature sensor	TM-50
				11. Secondary pressure sensor	TM-74
				12. TCM power supply and ground	TM-85
			OFF vehicle	13. Oil pump assembly	TM-168
				14. Reverse brake	
				15. Control valve	
				16. Parking components	

No.	Item	Symptom	Condition	Diagnostic item	Reference
6	Slips/Will Not Engage	Does not lock-up.	ON vehicle	1. CVT fluid level and state	TM-142
				2. Line pressure test	TM-146
				3. Engine speed signal	TM-59
				4. Primary speed sensor	TM-52
				5. Torque converter clutch solenoid valve	TM-62
				6. CAN communication line	TM-41
				7. Stall test	TM-144
				8. Step motor	TM-97
				9. PNP switch	TM-44
				10. Lock-up select solenoid valve	TM-94
				11. CVT fluid temperature sensor	TM-50
				12. Secondary speed sensor	TM-55
				13. Secondary pressure sensor	TM-74
			OFF vehicle	14. Torque converter	TM-172
				15. Oil pump assembly	TM-168
				16. Control valve	
7		Does not hold lock-up condition.	ON vehicle	1. CVT fluid level and state	TM-142
				2. Line pressure test	TM-146
				3. Engine speed signal	TM-59
				4. Primary speed sensor	TM-52
				5. Torque converter clutch solenoid valve	TM-62
				6. CAN communication line	TM-41
				7. Stall test	TM-144
				8. Step motor	TM-97
				9. PNP switch	TM-44
				10. Lock-up select solenoid valve	TM-94
				11. CVT fluid temperature sensor	TM-50
				12. Secondary speed sensor	TM-55
				13. Secondary pressure sensor	TM-74
			OFF vehicle	14. Torque converter	TM-172
				15. Oil pump assembly	TM-168
				16. Control valve	

No.	Item	Symptom	Condition	Diagnostic item	Reference
8	Slips/Will Not Engage	Lock-up is not released.	ON vehicle	1. CVT fluid level and state	TM-142
				2. Line pressure test	TM-146
				3. Engine speed signal	TM-59
				4. Primary speed sensor	TM-52
				5. Torque converter clutch solenoid valve	TM-62
				6. CAN communication line	TM-41
				7. Stall test	TM-144
			OFF vehicle	8. Torque converter	TM-172
				9. Oil pump assembly	TM-168
				10. Control valve	
9		With selector lever in “D” position, acceleration is extremely poor.	ON vehicle	1. CVT fluid level and state	TM-142
				2. Line pressure test	TM-146
				3. Stall test	TM-144
				4. Accelerator pedal position sensor	TM-88
				5. CAN communication line	TM-41
				6. PNP switch	TM-44
				7. CVT position	TM-152
				8. Step motor	TM-97
				9. Primary speed sensor	TM-52
				10. Secondary speed sensor	TM-55
				11. Accelerator pedal position sensor	TM-88
				12. Primary pressure sensor	TM-80
				13. Secondary pressure sensor	TM-74
				14. CVT fluid temperature sensor	TM-50
				15. TCM power supply and ground	TM-85
			OFF vehicle	16. Torque converter	TM-172
				17. Oil pump assembly	TM-168
				18. Forward clutch	
				19. Control valve	

No.	Item	Symptom	Condition	Diagnostic item	Reference
10	Slips/Will Not Engage	With selector lever in “R” position, acceleration is extremely poor.	ON vehicle	1. CVT fluid level and state	TM-142
				2. Line pressure test	TM-146
				3. Stall test	TM-144
				4. Accelerator pedal position sensor	TM-88
				5. CAN communication line	TM-41
				6. PNP switch	TM-44
				7. CVT position	TM-152
				8. Step motor	TM-97
				9. Primary speed sensor	TM-52
				10. Secondary speed sensor	TM-55
				11. Accelerator pedal position sensor	TM-88
				12. Primary pressure sensor	TM-80
				13. Secondary pressure sensor	TM-74
				14. CVT fluid temperature sensor	TM-50
				15. TCM power supply and ground	TM-85
			OFF vehicle	16. Torque converter	TM-172
				17. Oil pump assembly	TM-168
				18. Reverse brake	
				19. Control valve	
11		Slips at lock-up.	ON vehicle	1. CVT fluid level and state	TM-142
				2. Line pressure test	TM-146
				3. Engine speed signal	TM-59
				4. Primary speed sensor	TM-52
				5. Torque converter clutch solenoid valve	TM-62
				6. CAN communication line	TM-41
				7. Stall test	TM-144
				8. Step motor	TM-97
				9. PNP switch	TM-44
				10. Lock-up select solenoid valve	TM-94
				11. CVT fluid temperature sensor	TM-50
				12. Secondary speed sensor	TM-55
				13. Secondary pressure sensor	TM-74
			OFF vehicle	14. Torque converter	TM-172
				15. Oil pump assembly	TM-168
				16. Control valve	

No.	Item	Symptom	Condition	Diagnostic item	Reference
12	Others	No creep at all.	ON vehicle	1. CVT fluid level and state	TM-142
				2. Line pressure test	TM-146
				3. Accelerator pedal position sensor	TM-88
				4. PNP switch	TM-44
				5. CAN communication line	TM-41
				6. Stall test	TM-144
				7. CVT position	TM-152
				8. Step motor	TM-97
				9. Primary speed sensor	TM-52
				10. Secondary speed sensor	TM-55
				11. Accelerator pedal position sensor	TM-88
				12. CVT fluid temperature sensor	TM-50
				13. Primary pressure sensor	TM-80
				14. Secondary pressure sensor	TM-74
				15. TCM power supply and ground	TM-85
			OFF vehicle	16. Torque converter	TM-172
				17. Oil pump assembly	TM-168
				18. Gear system	
				19. Forward clutch	
				20. Reverse brake	
				21. Control valve	

No.	Item	Symptom	Condition	Diagnostic item	Reference
13	Others	Vehicle cannot drive in all positions.	ON vehicle	1. CVT fluid level and state	TM-142
				2. Line pressure test	TM-146
				3. PNP switch	TM-44
				4. Stall test	TM-144
				5. CVT position	TM-152
				6. Step motor	TM-97
				7. Primary speed sensor	TM-52
				8. Secondary speed sensor	TM-55
				9. Accelerator pedal position sensor	TM-88
				10. CVT fluid temperature sensor	TM-50
				11. Secondary pressure sensor	TM-74
				12. TCM power supply and ground	TM-85
			OFF vehicle	13. Torque converter	TM-172
				14. Oil pump assembly	TM-168
				15. Gear system	
				16. Forward clutch	
				17. Reverse brake	
				18. Control valve	
				19. Parking components	
14		With selector lever in “D” position, driving is not possible.	ON vehicle	1. CVT fluid level and state	TM-142
				2. Line pressure test	TM-146
				3. PNP switch	TM-44
				4. Stall test	TM-144
				5. CVT position	TM-152
				6. Step motor	TM-97
				7. Primary speed sensor	TM-52
				8. Secondary speed sensor	TM-55
				9. Accelerator pedal position sensor	TM-88
				10. CVT fluid temperature sensor	TM-50
				11. Secondary pressure sensor	TM-74
				12. TCM power supply and ground	TM-85
			OFF vehicle	13. Torque converter	TM-172
				14. Oil pump assembly	TM-168
				15. Gear system	
				16. Forward clutch	
				17. Control valve	
				18. Parking components	

No.	Item	Symptom	Condition	Diagnostic item	Reference
15	Others	With selector lever in “R” position, driving is not possible.	ON vehicle	1. CVT fluid level and state	TM-142
				2. Line pressure test	TM-146
				3. PNP switch	TM-44
				4. Stall test	TM-144
				5. CVT position	TM-152
				6. Step motor	TM-97
				7. Primary speed sensor	TM-52
				8. Secondary speed sensor	TM-55
				9. Accelerator pedal position sensor	TM-88
				10. CVT fluid temperature sensor	TM-50
				11. Secondary pressure sensor	TM-74
				12. TCM power supply and ground	TM-85
			OFF vehicle	13. Torque converter	TM-172
				14. Oil pump assembly	TM-168
				15. Gear system	
				16. Reverse brake	
				17. Control valve	
				18. Parking components	
16		Judder occurs during lock-up.	ON vehicle	1. CVT fluid level and state	TM-142
				2. Engine speed signal	TM-59
				3. Primary speed sensor	TM-52
				4. Secondary speed sensor	TM-55
				5. Accelerator pedal position sensor	TM-88
				6. CAN communication line	TM-41
				7. Torque converter clutch solenoid valve	TM-62
			OFF vehicle	8. Torque converter	TM-172
				9. Control valve	TM-168
17		Strange noise in “D” position.	ON vehicle	1. CVT fluid level and state	TM-142
				2. Engine speed signal	TM-59
				3. CAN communication line	TM-41
			OFF vehicle	4. Torque converter	TM-172
				5. Oil pump assembly	TM-168
				6. Gear system	
				7. Forward clutch	
				8. Control valve	
				9. Bearing	

No.	Item	Symptom	Condition	Diagnostic item	Reference
18	Others	Strange noise in “R” position.	ON vehicle	1. CVT fluid level and state	TM-142
				2. Engine speed signal	TM-59
				3. CAN communication line	TM-41
			OFF vehicle	4. Torque converter	TM-172
				5. Oil pump assembly	TM-168
				6. Gear system	
				7. Reverse brake	
				8. Control valve	
19		Strange noise in “N” position.	ON vehicle	1. CVT fluid level and state	TM-142
				2. Engine speed signal	TM-59
				3. CAN communication line	TM-41
			OFF vehicle	4. Torque converter	TM-172
				5. Oil pump assembly	TM-168
				6. Gear system	
				7. Control valve	
20		Vehicle does not decelerate by engine brake.	ON vehicle	1. CVT fluid level and state	TM-142
				2. CVT position	TM-152
				3. Sport mode switch	TM-108
				4. CAN communication line	TM-41
				5. Step motor	TM-97
				6. Primary speed sensor	TM-52
				7. Secondary speed sensor	TM-55
				8. Line pressure test	TM-146
				9. Engine speed signal	TM-59
				10. Accelerator pedal position sensor	TM-88
			OFF vehicle	11. Control valve	TM-168

No.	Item	Symptom	Condition	Diagnostic item	Reference
21	Others	Maximum speed low.	ON vehicle	1. CVT fluid level and state	TM-142
				2. Line pressure test	TM-146
				3. Accelerator pedal position sensor	TM-88
				4. CAN communication line	TM-41
				5. Stall test	TM-144
				6. Step motor	TM-97
				7. Primary speed sensor	TM-52
				8. Secondary speed sensor	TM-55
				9. Primary pressure sensor	TM-80
				10. Secondary pressure sensor	TM-74
				11. CVT fluid temperature sensor	TM-50
			OFF vehicle	12. Torque converter	TM-172
				13. Oil pump assembly	TM-168
				14. Gear system	
				15. Forward clutch	
				16. Control valve	
22		With selector lever in “P” position, vehicle does not enter parking condition or, with selector lever in another position, parking condition is not cancelled.	ON vehicle	1. PNP switch	TM-44
				2. CVT position	TM-152
			OFF vehicle	3. Parking components	TM-168
23		Vehicle drives with CVT in “P” position.	ON vehicle	1. PNP switch	TM-44
				2. CVT fluid level and state	TM-142
				3. CVT position	TM-152
			OFF vehicle	4. Parking components	TM-168
				5. Gear system	
				6. Control valve	
24		Vehicle drives with CVT in “N” position.	ON vehicle	1. PNP switch	TM-44
				2. CVT fluid level and state	TM-142
				3. CVT position	TM-152
			OFF vehicle	4. Gear system	TM-168
				5. Forward clutch	
				6. Reverse brake	
				7. Control valve	

No.	Item	Symptom	Condition	Diagnostic item	Reference
25	Others	Engine stall.	ON vehicle	1. CVT fluid level and state	TM-142
				2. Engine speed signal	TM-59
				3. Primary speed sensor	TM-52
				4. Torque converter clutch solenoid valve	TM-62
				5. CAN communication line	TM-41
				6. Stall test	TM-144
				7. Secondary pressure sensor	TM-74
			OFF vehicle	8. Torque converter	TM-172
				9. Control valve	TM-168
26		Engine stalls when selector lever is shifted “N”→“D”or “R”.	ON vehicle	1. CVT fluid level and state	TM-142
				2. Engine speed signal	TM-59
				3. Primary speed sensor	TM-52
				4. Torque converter clutch solenoid valve	TM-62
				5. CAN communication line	TM-41
				6. Stall test	TM-144
			OFF vehicle	7. Torque converter	TM-172
				8. Control valve	TM-168
27		Engine speed does not return to idle.	ON vehicle	1. CVT fluid level and state	TM-142
				2. Accelerator pedal position sensor	TM-88
				3. Secondary speed sensor	TM-55
				4. CAN communication line	TM-41
			OFF vehicle	5. Control valve	TM-168
28		CVT does not shift	ON vehicle	1. CVT fluid level and state	TM-142
				2. CVT position	TM-152
				3. Line pressure test	TM-146
				4. Engine speed signal	TM-59
				5. Accelerator pedal position sensor	TM-88
				6. CAN communication line	TM-41
				7. Primary speed sensor	TM-52
				8. Secondary speed sensor	TM-55
				9. Step motor	TM-97
			OFF vehicle	10. Control valve	TM-168
				11. Oil pump assembly	
29		Engine does not start in “N” or “P” position.	ON vehicle	1. Ignition switch and starter	PG-55, STR-6
				2. CVT position	TM-152
				3. PNP switch	TM-44

No.	Item	Symptom	Condition	Diagnostic item	Reference
30	Others	Engine starts in positions other than “N” or “P”.	ON vehicle	1. Ignition switch and starter	PG-55, STR-6
				2. CVT position	TM-152
				3. PNP switch	TM-44
31		When brake pedal is depressed with ignition switch ON, selector lever cannot be shifted from “P” position to other position.	ON vehicle	1. Stop lamp switch	TM-103
				2. Shift lock solenoid	
				3. Control device	
32		When brake pedal is not depressed with ignition switch ON, selector lever can be shifted from “P” position to other position.	ON vehicle	1. Stop lamp switch	TM-103
				2. Shift lock solenoid	
				3. Control device	
33		Cannot be changed to sport mode.	ON vehicle	1. Sport mode switch	TM-108
				2. CAN communication line	TM-41
				3. Combination meter	MWI-42
34		SPORT indicator lamp is not turned ON.	ON vehicle	1. CAN communication line	TM-41
				2. Combination meter	MWI-42
				3. TCM power supply and ground	TM-85

PRECAUTION

PRECAUTIONS

Precaution for Supplemental Restraint System (SRS) "AIR BAG" and "SEAT BELT PRE-TENSIONER"

INFOID:0000000003897161

The Supplemental Restraint System such as “AIR BAG” and “SEAT BELT PRE-TENSIONER”, used along with a front seat belt, helps to reduce the risk or severity of injury to the driver and front passenger for certain types of collision. Information necessary to service the system safely is included in the “SRS AIRBAG” and “SEAT BELT” of this Service Manual.

WARNING:

- **To avoid rendering the SRS inoperative, which could increase the risk of personal injury or death in the event of a collision which would result in air bag inflation, all maintenance must be performed by an authorized NISSAN/INFINITI dealer.**
- **Improper maintenance, including incorrect removal and installation of the SRS, can lead to personal injury caused by unintentional activation of the system. For removal of Spiral Cable and Air Bag Module, see the “SRS AIRBAG”.**
- **Never use electrical test equipment on any circuit related to the SRS unless instructed to in this Service Manual. SRS wiring harnesses can be identified by yellow and/or orange harnesses or harness connectors.**

Precaution Necessary for Steering Wheel Rotation after Battery Disconnect

INFOID:0000000003897162

NOTE:

- Before removing and installing any control units, first turn the push-button ignition switch to the LOCK position, then disconnect both battery cables.
- After finishing work, confirm that all control unit connectors are connected properly, then re-connect both battery cables.
- Always use CONSULT-III to perform self-diagnosis as a part of each function inspection after finishing work. If a DTC is detected, perform trouble diagnosis according to self-diagnosis results.

This vehicle is equipped with a push-button ignition switch and a steering lock unit.
If the battery is disconnected or discharged, the steering wheel will lock and cannot be turned.
If turning the steering wheel is required with the battery disconnected or discharged, follow the procedure below before starting the repair operation.

OPERATION PROCEDURE

1. Connect both battery cables.
   NOTE:
   Supply power using jumper cables if battery is discharged.
2. Turn the push-button ignition switch to ACC position.
   (At this time, the steering lock will be released.)
3. Disconnect both battery cables. The steering lock will remain released with both battery cables disconnected and the steering wheel can be turned.
4. Perform the necessary repair operation.
5. When the repair work is completed, re-connect both battery cables. With the brake pedal released, turn the push-button ignition switch from ACC position to ON position, then to LOCK position. (The steering wheel will lock when the push-button ignition switch is turned to LOCK position.)
6. Perform self-diagnosis check of all control units using CONSULT-III.

Precaution for Procedure without Cowl Top Cover

INFOID:0000000003897196

When performing the procedure after removing cowl top cover, cover the lower end of windshield with urethane, etc.

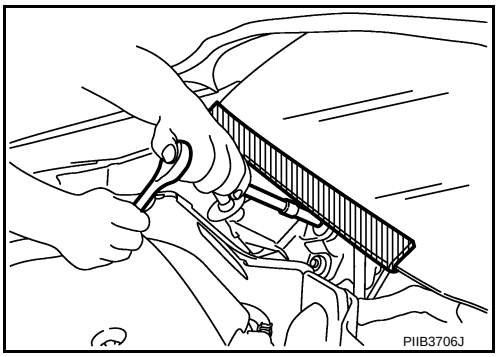

Precaution for On Board Diagnosis (OBD) System of CVT and Engine

INFOID:0000000003849068

The ECM has an on board diagnostic system. It will light up the malfunction indicator (MI) to warn the driver of a malfunction causing emission deterioration.

CAUTION:

- **Be sure to turn the ignition switch OFF and disconnect the battery cable from the negative terminal before any repair or inspection work. The open/short circuit of related switches, sensors, solenoid valves, etc. will cause the MI to light up.**
- **Be sure to connect and lock the connectors securely after work. A loose (unlocked) connector will cause the MI to light up due to an open circuit. (Be sure the connector is free from water, grease, dirt, bent terminals, etc.)**
- **Be sure to route and secure the harnesses properly after work. Interference of the harness with a bracket, etc. may cause the MI to light up due to a short circuit.**
- **Be sure to connect rubber tubes properly after work. A misconnected or disconnected rubber tube may cause the MI to light up due to a malfunction of the EVAP system or fuel injection system, etc.**
- **Be sure to erase the unnecessary malfunction information (repairs completed) from the TCM and ECM before returning the vehicle to the customer.**

Precaution for TCM and CVT Assembly Replacement

INFOID:0000000003849069

CAUTION:

- **Check if new data (Unit ID) are entered correctly after replacing CVT assembly and erasing data in TCM. (Connect CONSULT-III, and then turn ignition switch OFF.)**
- **When replacing CVT assembly or TCM, refer to the pattern table below and erase the EEPROM in the TCM if necessary.**

EEPROM ERASING PATTERNS

CVT assembly	TCM	Erasing EEPROM in TCM	Remarks
Replaced	Replaced	Not required	Not required because the EEPROM in the TCM is in the default state. (CVT assembly must be replaced first.)
Not replaced	Replaced	Not required	Not required because the EEPROM in the TCM is in the default state.
Replaced	Not replaced	Required	Required because data has been written in the EEPROM in the TCM and because the TCM cannot write data from the ROM assembly in the transmission.

Removal and Installation Procedure for CVT Unit Connector

INFOID:0000000003849070

REMOVAL

Rotate bayonet ring counterclockwise. Pull out CVT unit harness connector upward and remove it.

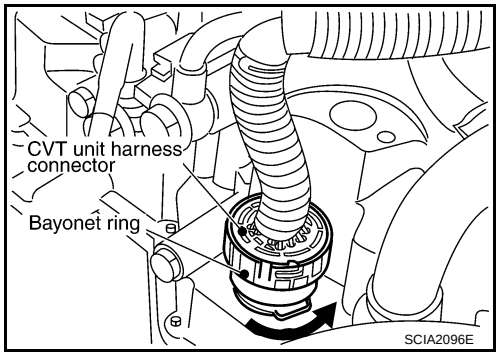

INSTALLATION

1. Align Δ marking on CVT unit harness connector terminal body with o marking on bayonet ring. Insert CVT unit harness connector. Then rotate bayonet ring clockwise.

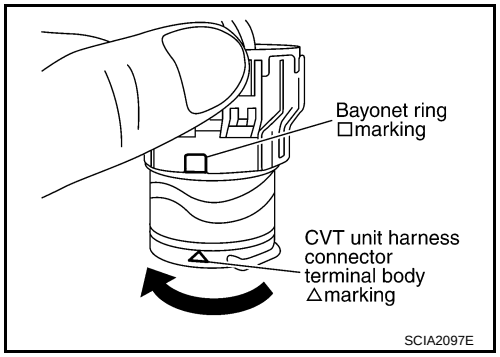

2. Rotate bayonet ring clockwise until Δ marking on CVT unit harness connector terminal body is aligned with the slit on bayonet ring as shown in the figure (correctly fitting condition). Install CVT unit harness connector to CVT unit harness connector terminal body.

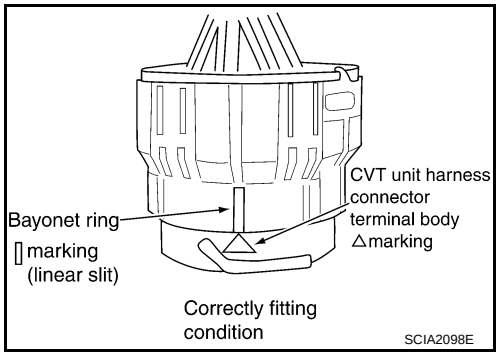

CAUTION:
- **Securely align Δ marking on CVT unit harness connector terminal body with bayonet ring slit. Then, be careful not to make a half fit condition as shown in the figure.**
- **Never mistake the slit of bayonet ring for other dent portion.**

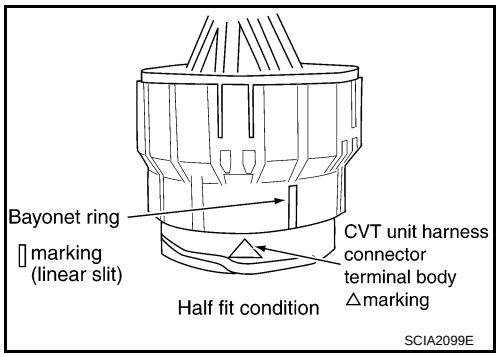

Precaution

INFOID:0000000003849071

- **Turn ignition switch OFF and disconnect negative battery cable before connecting or disconnecting the TCM harness connector. Because battery voltage is applied to TCM even if ignition switch is turned OFF.**

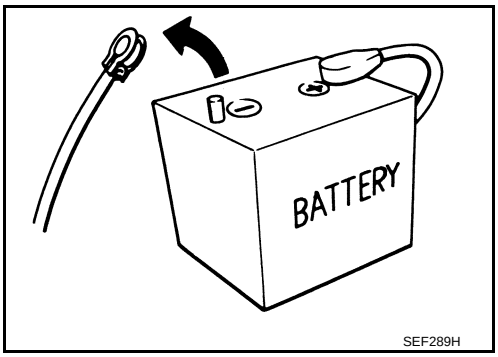

- **When connecting or disconnecting pin connectors into or from TCM, do not damage pin terminals (bend or break).**
  Check that there are not any bends or breaks on TCM pin terminal, when connecting pin connectors.

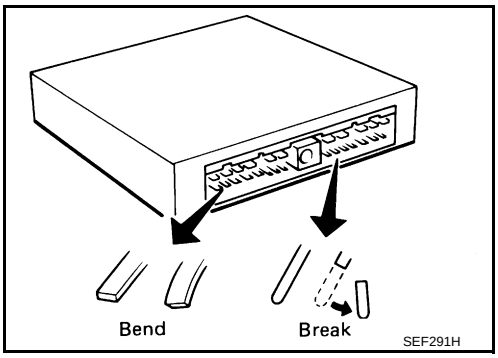

- **Perform TCM input/output signal inspection and check whether TCM functions normally or not before replacing TCM. TM-111, "Reference Value".**

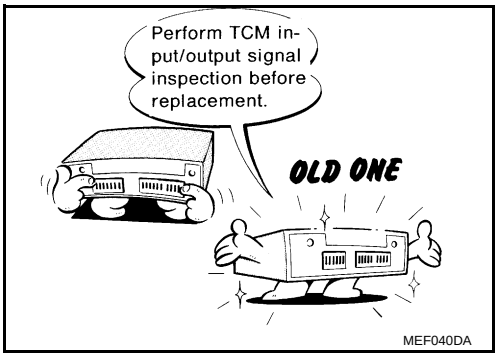

- **Perform “DTC Confirmation Procedure” after performing each TROUBLE DIAGNOSIS.**
  If the repair is completed the DTC should not be displayed in the “DTC Confirmation Procedure”.
- Always use the specified brand of CVT fluid. Refer to MA-11, "Fluids and Lubricants".
- Use lint-free paper, not cloth rags, during work.
- Dispose of the waste oil using the methods prescribed by law, ordinance, etc. after replacing the CVT fluid.

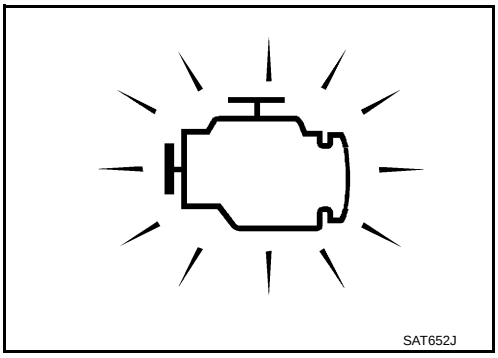

Service Notice or Precaution

INFOID:0000000003849072

OBD SELF-DIAGNOSIS

- CVT self-diagnosis is performed by the TCM in combination with the ECM. The results can be read through the blinking pattern of the Malfunction Indicator (MI). Refer to the table on TM-37, "CONSULT-III Function (TRANSMISSION)" for the indicator used to display each self-diagnostic result.
- The self-diagnostic results indicated by the MI are automatically stored in both the ECM and TCM memories.

Always perform the procedure on TM-35, "Diagnosis Description" to complete the repair and avoid unnecessary blinking of the MI.

For details of OBD, refer to EC-102, "Diagnosis Description".

- **Certain systems and components, especially those related to OBD, may use the new style slide-locking type harness connector. For description and how to disconnect, refer to PG-96.**

ATFTEMP COUNT Conversion Table

INFOID:0000000003849073

ATFTEMP COUNT	Temperature °C (°F)	ATFTEMP COUNT	Temperature °C (°F)
4	–30 (–22)	177	90 (194)
8	–20 (–4)	183	95 (203)
13	–10 (14)	190	100 (212)
17	–5 (23)	196	105 (221)
21	0 (32)	201	110 (230)
27	5 (41)	206	115 (239)
32	10 (50)	210	120 (248)
39	15 (59)	214	125 (257)
47	20 (68)	218	130 (266)
55	25 (77)	221	135 (275)
64	30 (86)	224	140 (284)
73	35 (95)	227	145 (293)
83	40 (104)	229	150 (302)
93	45 (113)	231	155 (311)
104	50 (122)	233	160 (320)
114	55 (131)	235	165 (329)
124	60 (140)	236	170 (338)
134	65 (149)	238	175 (347)
143	70 (158)	239	180 (356)
152	75 (167)	241	190 (374)
161	80 (176)	243	200 (392)
169	85 (185)	—	—

PREPARATION

PREPARATION

Special Service Tools

INFOID:0000000003849074

The actual shapes of Kent-Moore tools may differ from those of special service tools illustrated here.

Tool number Tool name	Description
1. ST25054000 Adapter 2. ST25055000 Adapter 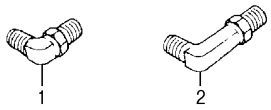 SCIA8372J	Measuring line pressure
KV31103600 Joint pipe adapter (With ST25054000) 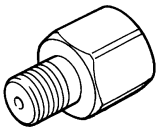 ZZA1227D	Measuring line pressure
ST33400001 Drift a: 60 mm (2.36 in) dia. b: 47 mm (1.85 in) dia. 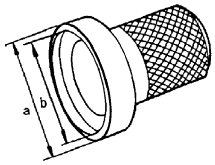 ZZA0814D	Installing differential side oil seal

Commercial Service Tools

INFOID:0000000003849075

Tool number Tool name	Description
Power tool 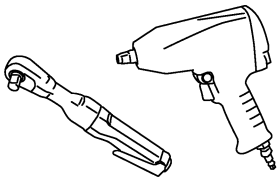 PBIC0190E	Loosening nuts and bolts

Tool number Tool name	Description
Oil pressure gauge set 1.Oil pressure gauge 2.Hose 3.Joint pipe 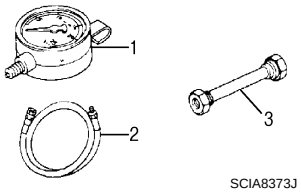 	Measuring line pressure
31197CA000 Drive plate location guide a: 14 mm (0.55 in) dia. 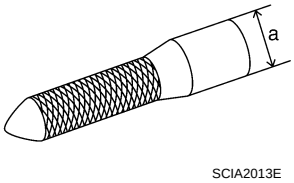 	Installing transaxle assembly

ON-VEHICLE MAINTENANCE

CVT FLUID

Inspection

INFOID:0000000003849076

CHECKING CVT FLUID

The fluid level should be checked with the fluid warmed up to 50 to 80°C (122 to 176°F). The fluid level check procedure is as follows:

1. Check for fluid leakage.
2. With the engine warmed up, drive the vehicle in an urban area. When ambient temperature is 20°C (68°F), it takes about 10 minutes for the CVT fluid to warm up to 50 to 80°C (122 to 176°F).
3. Park the vehicle on a level surface.
4. Apply parking brake firmly.
5. With engine at idle, while depressing brake pedal, move shift selector throughout the entire shift range.

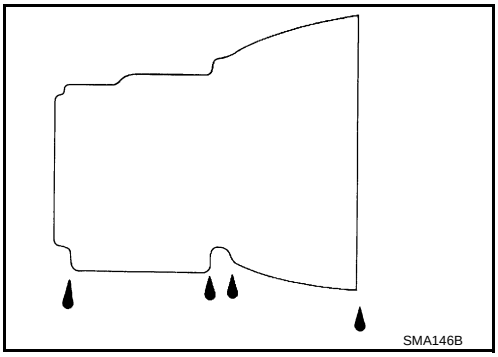

6. Pull out the CVT fluid level gauge from the CVT fluid charging pipe after pressing the tab on the CVT fluid level gauge to release the lock.

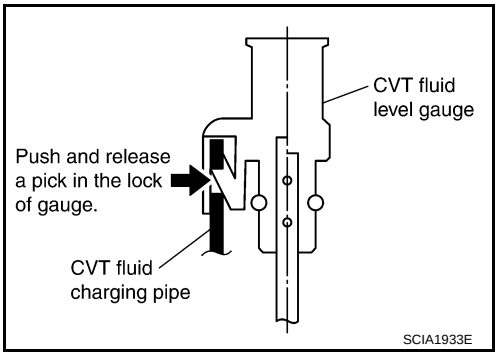

7. Wipe fluid off the CVT fluid level gauge. Insert the CVT fluid level gauge rotating 180° from the originally installed position, then securely push the CVT fluid level gauge until it meets the top end of the CVT fluid charging pipe.
   CAUTION:
   When wiping away the CVT fluid level gauge, always use lint-free paper, not a cloth rag.

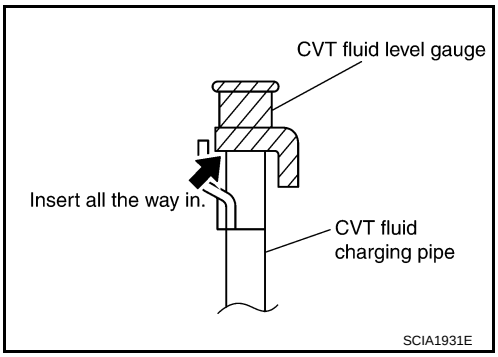

8. Place the selector lever in “P” or “N” and check that the fluid level is within the specified range.
   CAUTION:
   When reinstalling CVT fluid level gauge, insert it into the CVT fluid charging pipe and rotate it to the original installation position until securely locked.

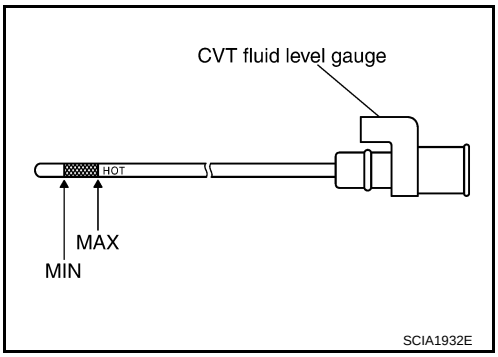

CVT FLUID CONDITION

Check CVT fluid condition.
- If CVT fluid is very dark or smells burned, check operation of CVT. Flush cooling system after repair of CVT.
- If CVT fluid contains frictional material (clutches, brakes, etc.), replace radiator and flush cooler line using cleaning solvent and compressed air after repair of CVT. Refer to CO-13, "Exploded View".

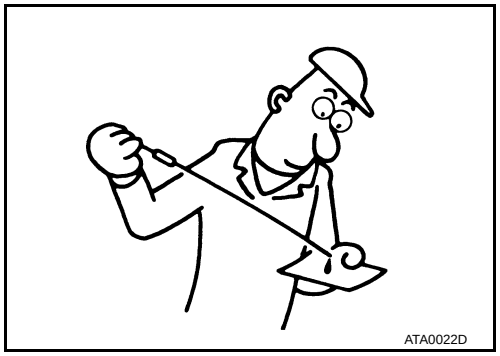

Fluid status	Conceivable cause	Required operation
Varnished (viscous varnish state)	CVT fluid becomes degraded due to high temperatures.	Replace the CVT fluid and check the CVT main unit and the vehicle for malfunctions (wire harnesses, cooler pipes, etc.)
Milky white or cloudy	Water in the fluid	Replace the CVT fluid and check for places where water is getting in.
Large amount of metal powder mixed in	Unusual wear of sliding parts within CVT	Replace the CVT fluid and check for improper operation of the CVT.

Changing

INFOID:0000000003849077

CAUTION:
Replace O-ring with new ones at the final stage of the operation when installing.

1. Remove drain plug from oil pan.
2. Remove drain plug gasket from drain plug.
3. Install drain plug gasket to drain plug.
   CAUTION:
   Never reuse drain plug gasket.
4. Install drain plug to oil pan.

   Drain plug – tightening torque : Refer to TM-159, "Exploded View"

5. Fill CVT fluid from CVT fluid charging pipe to the specified level.

   CVT fluid : Refer to TM-174, "General Specification".
   Fluid capacity : Refer to TM-174, "General Specification".

   CAUTION:
   - **Use only Genuine NISSAN CVT Fluid NS-2. Never mix with other fluid.**
   - **Using CVT fluid other than Genuine NISSAN CVT Fluid NS-2 will deteriorate in driveability and CVT durability, and may damage the CVT, which is not covered by the warranty.**
   - **When filling CVT fluid, take care not to scatter heat generating parts such as exhaust.**
   - **Sufficiently shake the container of CVT fluid before using.**
   - **Delete CVT fluid deterioration date with CONSULT-III after changing CVT fluid. Refer to TM-37, "CONSULT-III Function (TRANSMISSION)".**
6. With the engine warmed up, drive the vehicle in an urban area.
   NOTE:
   When ambient temperature is 20°C (68°F), it takes about 10 minutes for the CVT fluid to warm up to 50 to 80°C (122 to 176°F).
7. Check CVT fluid level and condition.
8. Repeat steps 1 to 5 if CVT fluid has been contaminated.

STALL TEST

Inspection and Judgment

INFOID:0000000003849078

INSPECTION

1. Inspect the amount of engine oil. Replenish the engine oil if necessary.
2. Drive for about 10 minutes to warm up the vehicle so that the CVT fluid temperature is 50 to 80°C (122 to 176°F). Inspect the amount of CVT fluid. Replenish if necessary.

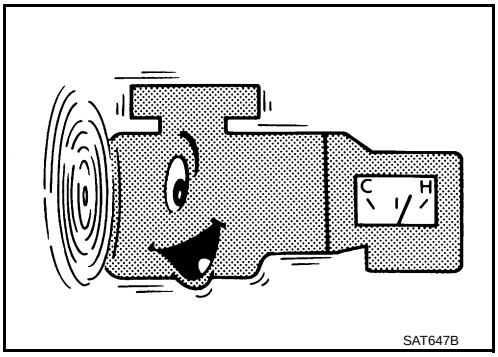

3. Securely engage parking brake so that the tires do not turn.
4. Install a tachometer where it can be seen by driver during test.
   NOTE:
   It is good practice to mark the point of specified engine rpm on indicator.
5. Start engine, apply foot brake, and move selector lever to “D” position.

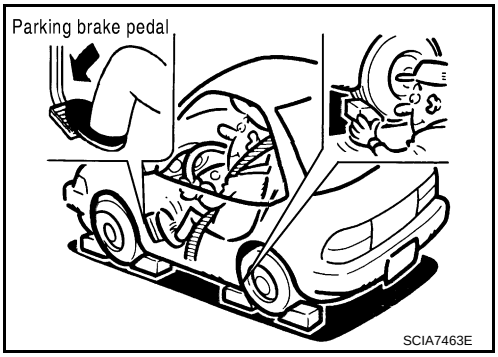

6. Gradually press down accelerator pedal while holding down the foot brake.
7. Quickly read off the stall speed, and then quickly remove your foot from accelerator pedal.
   CAUTION:
   Never hold down accelerator pedal for more than 5 seconds during this test.

   Stall speed : Refer to TM-174, "Stall Speed".

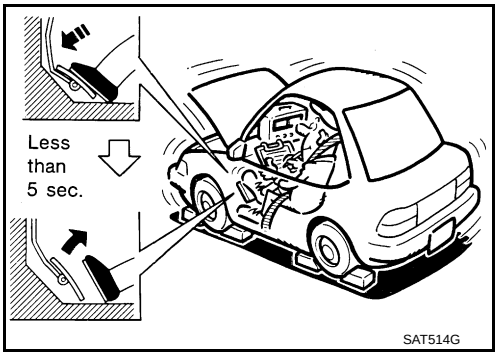

8. Move selector lever to “N” position.
9. Cool down the CVT fluid.
   CAUTION:
   Run the engine at idle for at least 1 minute.
10. Repeat steps 6 through 9 with selector lever in “R” position.

JUDGMENT

	Selector lever position		Expected problem location
	“D”	“R”	
Stall rotation	H	O	• Forward clutch
	O	H	• Reverse brake
	L	L	• Engine and torque converter one-way clutch
	H	H	• Line pressure low • Primary pulley • Secondary pulley • Steel belt

O: Stall speed within standard value position.
H: Stall speed is higher than standard value.
L: Stall speed is lower than standard value.

LINE PRESSURE TEST

Inspection and Judgment

INFOID:0000000003849079

INSPECTION

Line Pressure Test Procedure

1. Inspect the amount of engine oil and replenish if necessary.
2. Drive the car for about 10 minutes to warm it up so that the CVT fluid reaches in the range of 50 to 80°C (122 to 176°F). Then inspect the amount of CVT fluid and replenish if necessary.
   NOTE:
   The CVT fluid temperature rises in the range of 50 to 80°C (122 to 176°F) during 10 minutes of driving.
3. After warming up CVT, remove the oil pressure detection plug and install the joint pipe adapter (SST: KV31103600), adapter (SST: 25054000), oil pressure gauge set (commercial service tool).
   CAUTION:
   When using the oil pressure gauge, be sure to use the O-ring attached to the oil pressure detection plug.

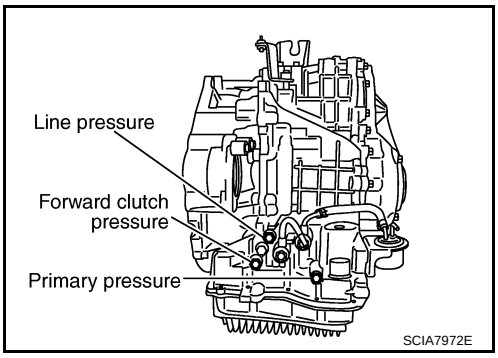

4. Securely engage parking brake so that the tires do not turn.

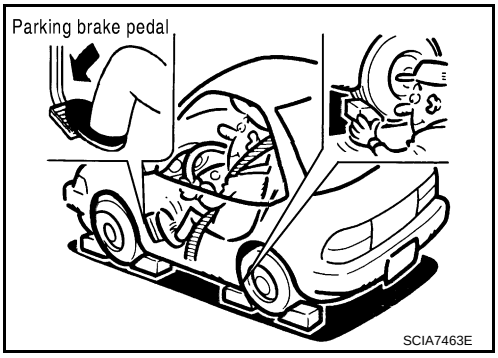

5. Start the engine, and then measure the line pressure at both idle and the stall speed.
   CAUTION:
   - **Keep brake pedal pressed all the way down during measurement.**
   - **When measuring the line pressure at the stall speed. Refer to TM-144, "Inspection and Judgment".**

   Line pressure : Refer to TM-174, "Line Pressure".

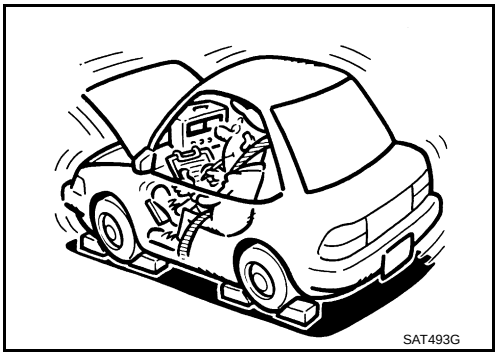

6. Install oil pressure detection plug and tighten to the specified torque below after the measurements are complete.

   : 7.5 N·m (0.77 kg-m, 66 in-lb)

   CAUTION:
   - **Never reuse O-ring.**
   - **Apply CVT fluid to O-ring.**

JUDGMENT

Judgment		Possible cause
Idle speed	Low for all positions (“P”, “R”, “N”, “D”, “L”)	Possible causes include malfunctions in the pressure supply system and low oil pump output. For example • Oil pump wear • Pressure regulator valve or plug sticking or spring fatigue • Oil strainer ⇒ oil pump ⇒ pressure regulator valve passage oil leak • Engine idle speed too low
	Only low for a specific position	Possible causes include an oil pressure leak in a passage or device related to the position after the pressure is distributed by the manual valve.
	High	Possible causes include a sensor malfunction or malfunction in the line pressure adjustment function. For example • Accelerator pedal position signal malfunction • CVT fluid temperature sensor malfunction • Pressure control solenoid A (line pressure solenoid) malfunction (sticking in OFF state, filter clog, cut line) • Pressure regulator valve or plug sticking
Stall speed	Line pressure does not rise higher than the line pressure for idle.	Possible causes include a sensor malfunction or malfunction in the pressure adjustment function. For example • Accelerator pedal position signal malfunction • TCM malfunction • Pressure control solenoid A (line pressure solenoid) malfunction (shorting, sticking in ON state) • Pressure regulator valve or plug sticking
	The pressure rises, but does not enter the standard position.	Possible causes include malfunctions in the pressure supply system and malfunction in the pressure adjustment function. For example • Accelerator pedal position signal malfunction • Pressure control solenoid A (line pressure solenoid) malfunction (sticking, filter clog) • Pressure regulator valve or plug sticking
	Only low for a specific position	Possible causes include an oil pressure leak in a passage or device related to the position after the pressure is distributed by the manual valve.

ROAD TEST

Description

INFOID:0000000003849080

DESCRIPTION

- The purpose of the test is to determine the overall performance of CVT and analyze causes of problems.
- The road test consists of the following three parts:

1. “Check Before Engine Is Started” TM-148.
2. “Check at Idle” TM-149.
3. “Cruise Test” TM-150.

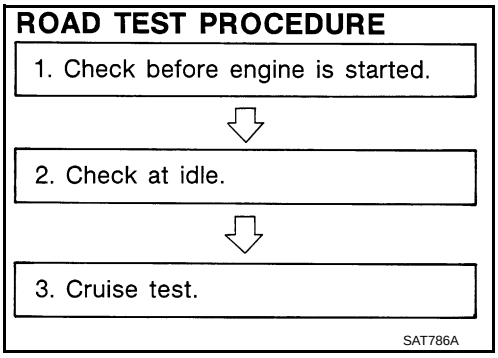

- Before the road test, familiarize yourself with all test procedures and items to check.
- Perform tests for all the check items until a malfunction phenomenon is detected. Perform diagnosis for NG items after the completion of road tests.

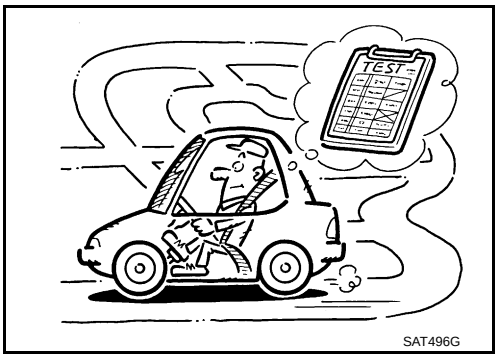

CONSULT-III SETTING PROCEDURE

- Using CONSULT-III, perform a cruise test and record the result.
- Print the result and ensure that shifts and lock-ups take place as per Shift Schedule.

1. Touch “Data Monitor” on “Direct Diagnostic Mode” screen.
2. Touch “MAIN SIGNALS” to set recording condition.
3. See “Numerical Display”, “Barchart Display” or “Line Graph Display”.
4. Touch “START”.
5. When performing cruise test. Refer to TM-150, "Cruise Test".
6. After finishing cruise test part, touch “RECORD”.
7. Touch “STORE”.
8. Touch “BACK”.
9. Touch “DISPLAY”.
10. Touch “PRINT”.
11. Check the monitor data printed out.

Check before Engine Is Started

INFOID:0000000003849081

1. CHECK SPORT INDICATOR LAMP

1. Park vehicle on flat surface.
2. Move selector lever to “P” position.
3. Turn ignition switch OFF. Wait at least 5 seconds.
4. Turn ignition switch ON. (Do not start engine.)

Has SPORT indicator lamp been turned ON for about 2 seconds?

YES >> 1. Turn ignition switch OFF.
2. Perform self-diagnosis and note NG items. Refer to TM-121, "DTC Index".
3. Go to TM-149, "Check at Idle".

NO >> Stop “Road Test”. Refer to TM-123, "Symptom Table".

Check at Idle

INFOID:0000000003849082

1. CHECK STARTING THE ENGINE (PART 1)

1. Park vehicle on flat surface.
2. Move selector lever to “P” or “N” position.
3. Turn ignition switch OFF.
4. Turn ignition switch to “START” position.

Is engine started?

YES >> GO TO 2.
NO >> Stop “Road Test”. Refer to TM-123, "Symptom Table".

2. CHECK STARTING THE ENGINE (PART 2)

1. Turn ignition switch ON.
2. Move selector lever to “D”, “L” or “R” position.
3. Turn ignition switch to “START” position.

Is engine started?

YES >> Stop “Road Test”. Refer to TM-123, "Symptom Table".
NO >> GO TO 3.

3. CHECK “P” POSITION FUNCTION

1. Move selector lever to “P” position.
2. Turn ignition switch OFF.
3. Release parking brake.
4. Push vehicle forward or backward.
5. Apply parking brake.

Does vehicle move forward or backward?

YES >> Refer to TM-123, "Symptom Table". GO TO 4.
NO >> GO TO 4.

4. CHECK “N” POSITION FUNCTION

1. Start engine.
2. Move selector lever to “N” position.
3. Release parking brake.

Does vehicle move forward or backward?

YES >> Refer to TM-123, "Symptom Table". GO TO 5.
NO >> GO TO 5.

5. CHECK SHIFT SHOCK

1. Apply foot brake.
2. Move selector lever to “R” position.

Is there large shock when changing from “N” to “R” position?

YES >> Refer to TM-123, "Symptom Table". GO TO 6.
NO >> GO TO 6.

6. CHECK “R” POSITION FUNCTION

Release foot brake for several seconds.

Does vehicle creep backward when foot brake is released?

YES >> GO TO 7.
NO >> Refer to TM-123, "Symptom Table". GO TO 7.

7. CHECK “D” POSITION FUNCTION

Move selector lever to “D” and “L” position and check if vehicle creeps forward.

Does vehicle creep forward in all positions?

YES >> Go to TM-150, "Cruise Test".
NO >> Stop “Road Test”. Refer to TM-123, "Symptom Table".

Cruise Test

INFOID:0000000003849083

1. CHECK VEHICLE SPEED WHEN SHIFTING GEARS (PART 1)

1. Drive vehicle for approximately 10 minutes to warm engine oil and CVT fluid up to operating temperature.

CVT fluid operating temperature : 50 – 80°C (122 – 176°F)

2. Park vehicle on flat surface.
3. Move selector lever to “P” position.
4. Start engine.
5. Move selector lever to “D” position.
6. Accelerate vehicle at 2/8 throttle opening and check “Vehicle Speed When Shifting Gears”.

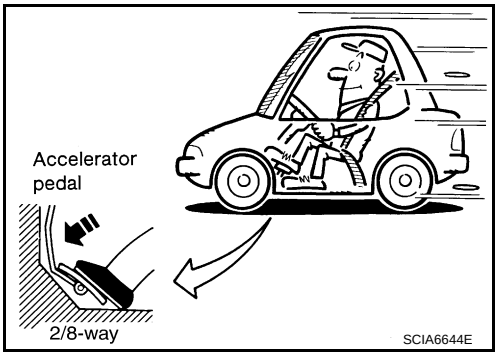

With CONSULT-III

- Read vehicle speed and engine speed. Refer to TM-174, "Vehicle Speed When Shifting Gears".

Is the inspection result normal?

YES >> GO TO 2.
NO >> Refer to TM-123, "Symptom Table". GO TO 2.

2. CHECK VEHICLE SPEED WHEN SHIFTING GEARS (PART 2)

1. Park vehicle on flat surface.
2. Move selector lever to “D” position.
3. Accelerate vehicle at 8/8 throttle opening and check “Vehicle Speed When Shifting Gears”.

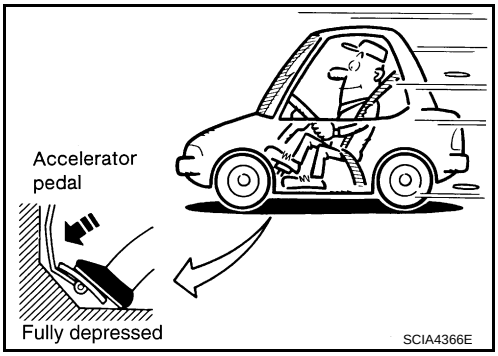

With CONSULT-III

- Read vehicle speed and engine speed. Refer to TM-174, "Vehicle Speed When Shifting Gears".

Is the inspection result normal?

YES >> GO TO 3.
NO >> Refer to TM-123, "Symptom Table". GO TO 3.

3. CHECK SPORT MODE FUNCTION (PART 1)

1. Park vehicle on flat surface.
2. Push sport mode switch.
3. Accelerate vehicle at 2/8 throttle opening and check “Vehicle Speed When Shifting Gears”.

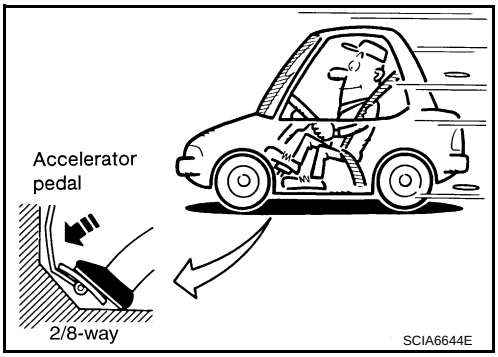

With CONSULT-III

- Read vehicle speed and engine speed. Refer to TM-174, "Vehicle Speed When Shifting Gears".

Is the inspection result normal?

YES >> GO TO 4.
NO >> Refer to TM-123, "Symptom Table". GO TO 4.

4. CHECK SPORT MODE FUNCTION (PART 2)

1. Park vehicle on flat surface.
2. Push sport mode switch.

3. Accelerate vehicle at 8/8 throttle opening and check “Vehicle Speed When Shifting Gears”.

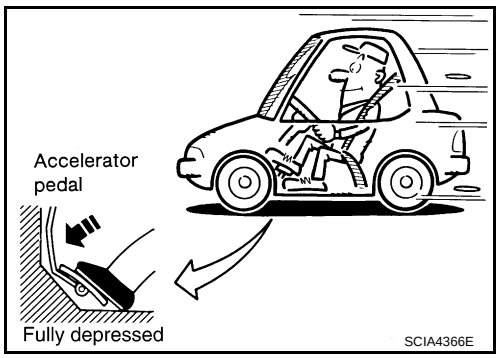

With CONSULT-III

- Read vehicle speed and engine speed. Refer to TM-174, "Vehicle Speed When Shifting Gears".

Is the inspection result normal?

YES >> GO TO 5.
NO >> Refer to TM-123, "Symptom Table". GO TO 5.

5. CHECK “L” POSITION FUNCTION (PART 1)

1. Park vehicle on flat surface.
2. Move selector lever to “L” position.
3. Accelerate vehicle at 2/8 throttle opening and check “Vehicle Speed When Shifting Gears”.

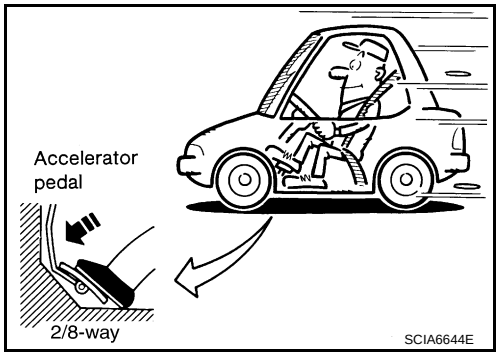

With CONSULT-III

- Read vehicle speed and engine speed. Refer to TM-174, "Vehicle Speed When Shifting Gears".

Is the inspection result normal?

YES >> GO TO 6.
NO >> Refer to TM-123, "Symptom Table". GO TO 6.

6. CHECK “L” POSITION FUNCTION (PART 2)

1. Park vehicle on flat surface.
2. Move selector lever to “L” position.
3. Accelerate vehicle at 8/8 throttle opening and check “Vehicle Speed When Shifting Gears”.

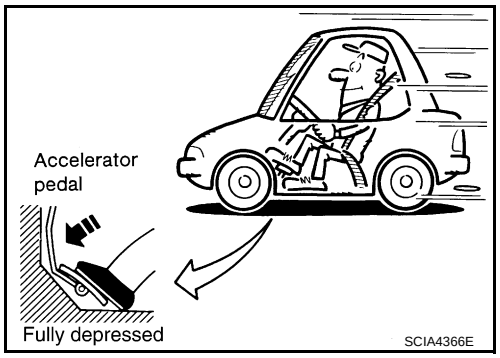

With CONSULT-III

- Read vehicle speed and engine speed. Refer to TM-174, "Vehicle Speed When Shifting Gears".

Is the inspection result normal?

YES >> GO TO 7.
NO >> Refer to TM-123, "Symptom Table". GO TO 7.

7. CHECK ENGINE BRAKE FUNCTION

Check engine brake.

Does engine braking effectively reduce vehicle speed in “L” position?

YES >> 1. Stop the vehicle.
2. Perform “Self Diagnostic Results” mode for “TRANSMISSION”.
NO >> Refer to TM-123, "Symptom Table". Then continue trouble diagnosis.

CVT POSITION

Inspection and Adjustment

INFOID:0000000003849084

INSPECTION

1. Move selector lever to “P” position, and turn ignition switch ON (engine stop).
2. Check that selector lever can be shifted to other than “P” position when brake pedal is depressed. Also check that selector lever can be shifted from “P” position only when brake pedal is depressed.
3. Move selector lever and check for excessive effort, sticking, noise or rattle.
4. Check that selector lever stops at each position with the feel of engagement when it is moved through all the positions. Check that the actual position of selector lever matches the position shown by shift position indicator and manual lever on the transaxle.
5. The method of operating selector lever to individual positions correctly should be as shown.
6. When selector button is pressed in “P”, “R”, “N”, “D” or “L” position without applying forward/backward force to selector lever, check button operation for sticking.
7. Check that back-up lamps illuminate only when selector lever is placed in the “R” position.
8. When in “R” position, check that back-up lamps illuminate even when the selector lever is pushed toward the “P” position.
   CAUTION:
   Check the lighting without pressing shift button.

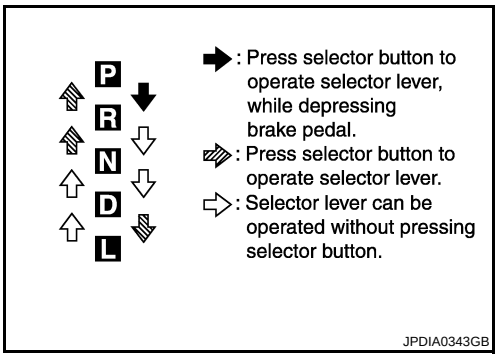

9. Check that back-up lamps do not illuminate when selector lever is pushed toward the “R” position when in the “P” or “N” position.
   CAUTION:
   Check the lighting without pressing shift button.
10. Check that the engine can only be started with selector lever in the “P” and “N” positions.
11. Check that transaxle is locked completely in “P” position.

ADJUSTMENT

1. Move selector lever to “ P” position.
   CAUTION:
   Turn wheels more than 1/4 rotations and apply the park lock.
2. Loosen the control cable nut (A).
3. Place manual lever (B) to “P” position.
   CAUTION:
   Never apply any force to manual lever.
4. Tighten the control cable nut. Refer to TM-157, "Exploded View".
   CAUTION:
   Fix manual lever when tightening.

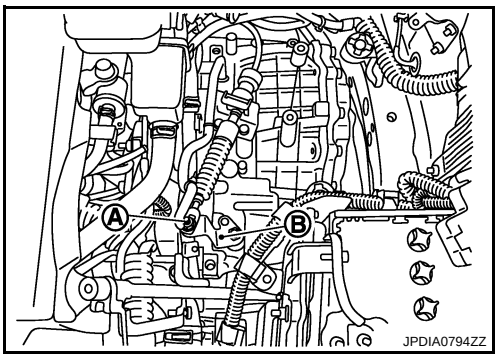

ON-VEHICLE REPAIR

TRANSMISSION CONTROL MODULE

Exploded View

INFOID:0000000003849085

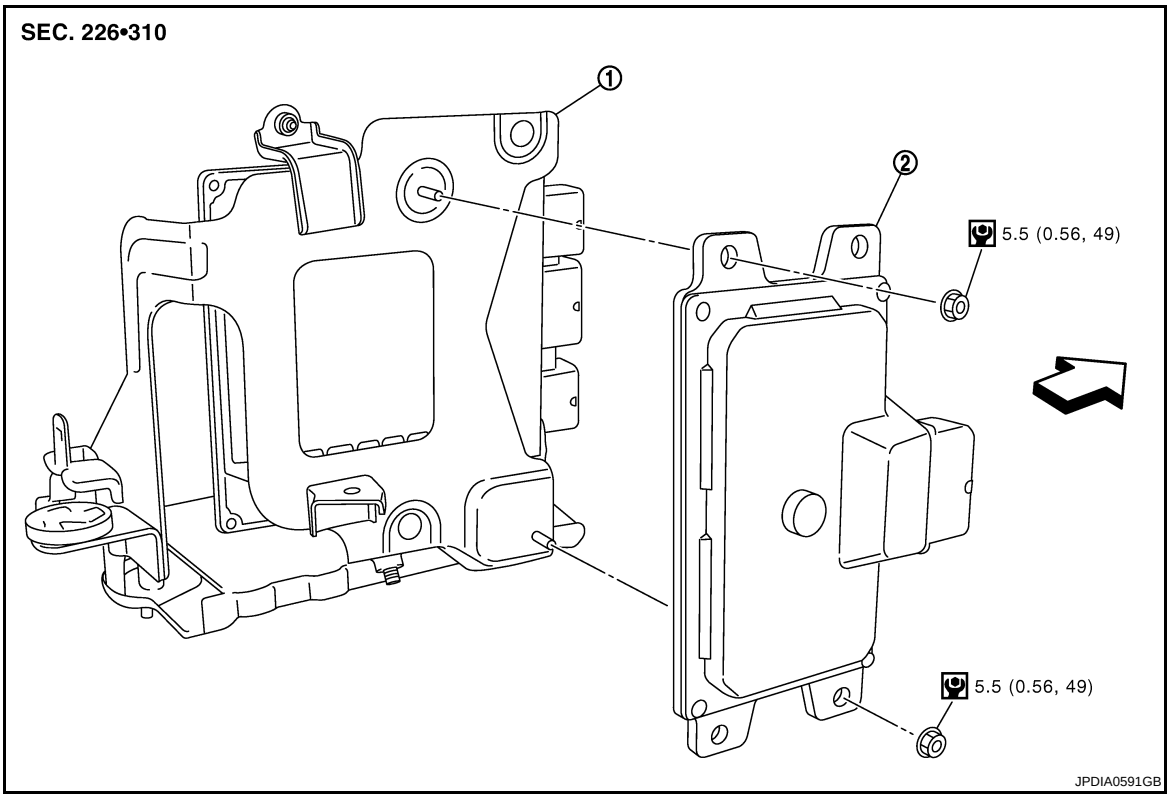

1. Bracket
2. TCM

⇦ : Vehicle front

Refer to GI-4, "Components" for symbols in the figure.

Removal and Installation

INFOID:0000000003849086

REMOVAL

CAUTION:

Never impact on TCM when removing or installing TCM.

1. Disconnect the battery cable from the negative terminal.
2. Remove air duct (inlet). Refer to EM-26, "Exploded View".
3. Disconnect TCM connector (A).

⇦ : Vehicle front

4. Remove TCM (1) from bracket.

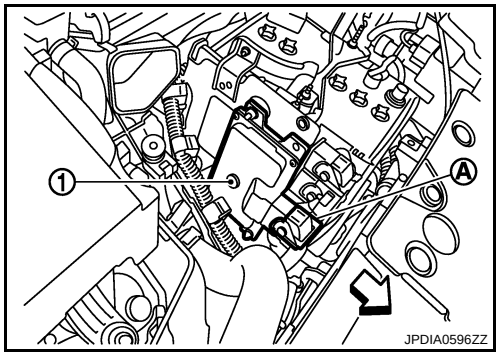

INSTALLATION

Install in the reverse order of removal.

Adjustment

INFOID:0000000003849087

ADJUSTMENT AFTER INSTALLATION

After TCM is replaced. Refer to TM-12, "ADDITIONAL SERVICE WHEN REPLACING CONTROL UNIT : Precaution for TCM and CVT Assembly Replacement".

CONTROL DEVICE

Exploded View

INFOID:0000000003849088

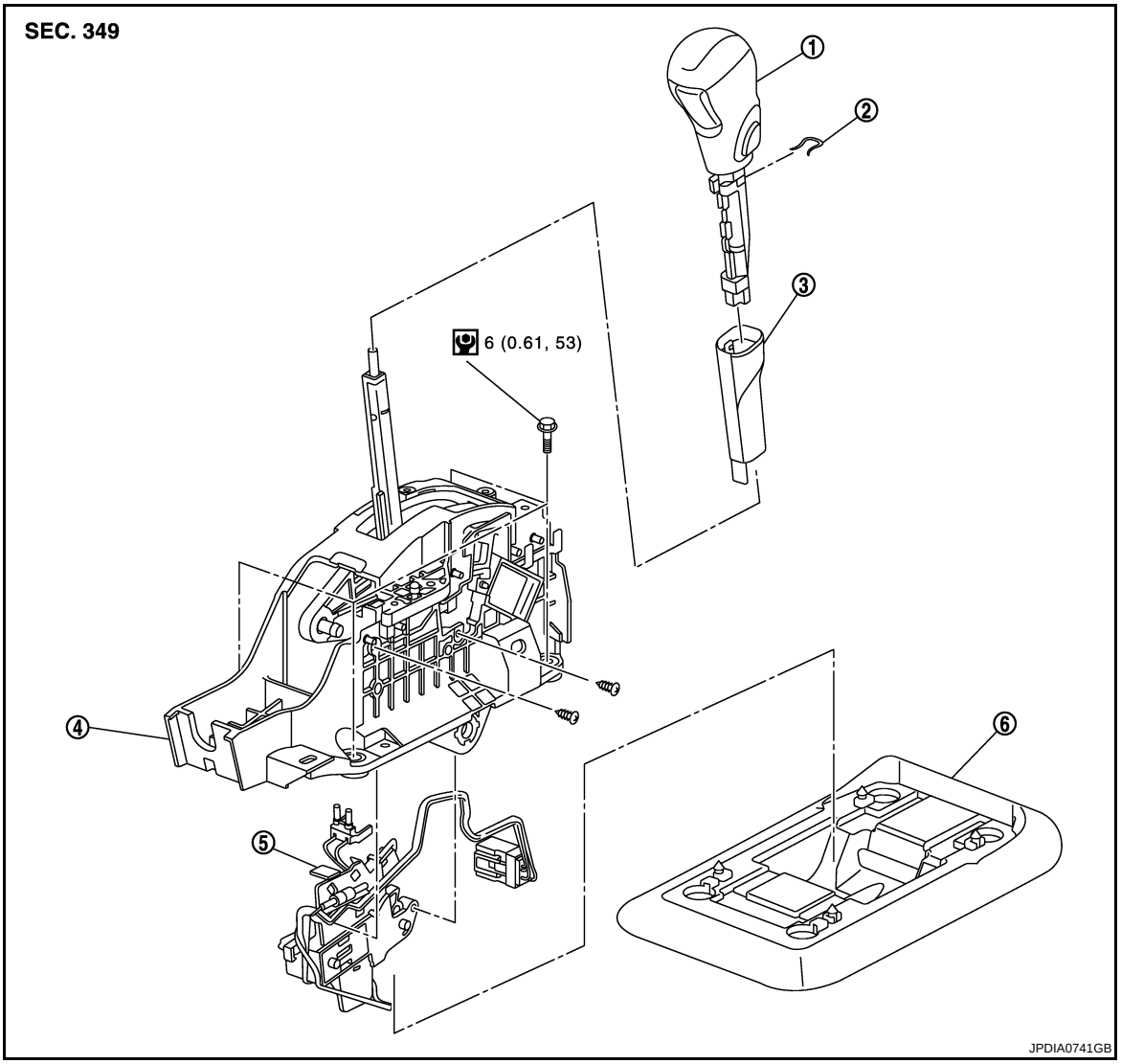

1.	Selector lever knob	2.	Lock pin	3.	Knob cover
4.	Control device assembly	5.	Shift lock unit	6.	Dust cover

Refer to GI-4, "Components" for symbols in the figure.

Removal and Installation

INFOID:0000000003849089

REMOVAL

1. Disconnect the battery cable from the negative terminal.

2. Slide knob cover (1) below selector lever downward.
   CAUTION:
   Be careful not to damage knob cover.
3. Pull lock pin (2) out of selector lever knob (3).
4. Remove selector lever knob and knob cover.
5. Remove center console assembly. Refer to IP-22, "Exploded View".

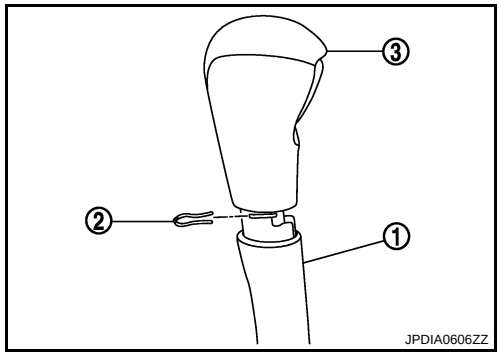

6. Remove control cable (1) from control device assembly. Refer to TM-157, "Exploded View".
7. Remove control device assembly (2).

   ⬅ : Bolt

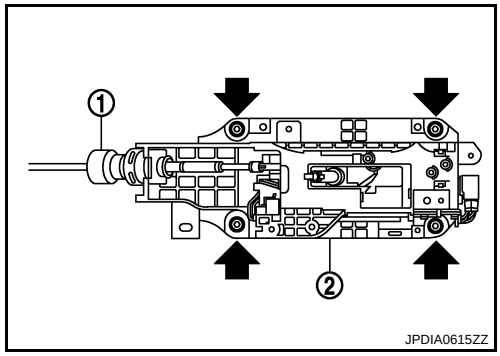

8. Remove control device connector (A) using a flat-bladed screw-driver (B).
   CAUTION:
   Be careful not to damage control device connector.
9. Remove shift lock unit from control device assembly.

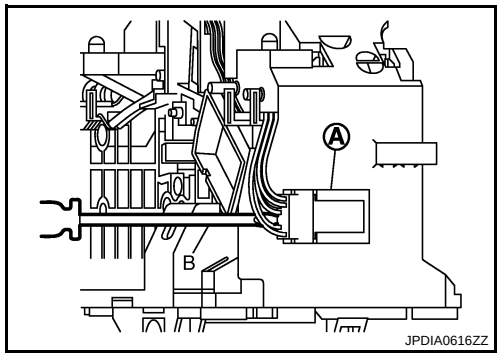

INSTALLATION

Note the following, and install in the reverse order of removal.
When installing control cable (1) to control device assembly (2), check that control cable is fully pressed in with the ribbed (A) surface facing upward.

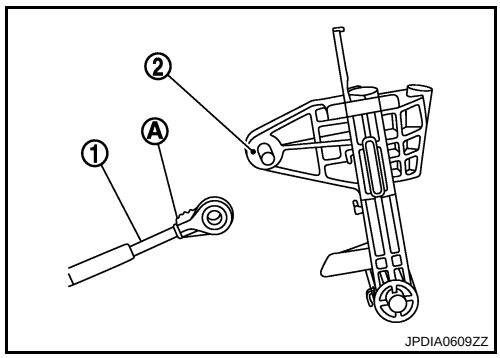

Inspection and Adjustment

INFOID:0000000003849090

ADJUSTMENT AFTER INSTALLATION

Adjust the CVT positions after installing control device. Refer to TM-152, "Inspection and Adjustment".

INSPECTION AFTER INSTALLATION

Check the CVT positions after adjusting the CVT positions. Refer to TM-152, "Inspection and Adjustment".

CONTROL CABLE

Exploded View

INFOID:0000000003849091

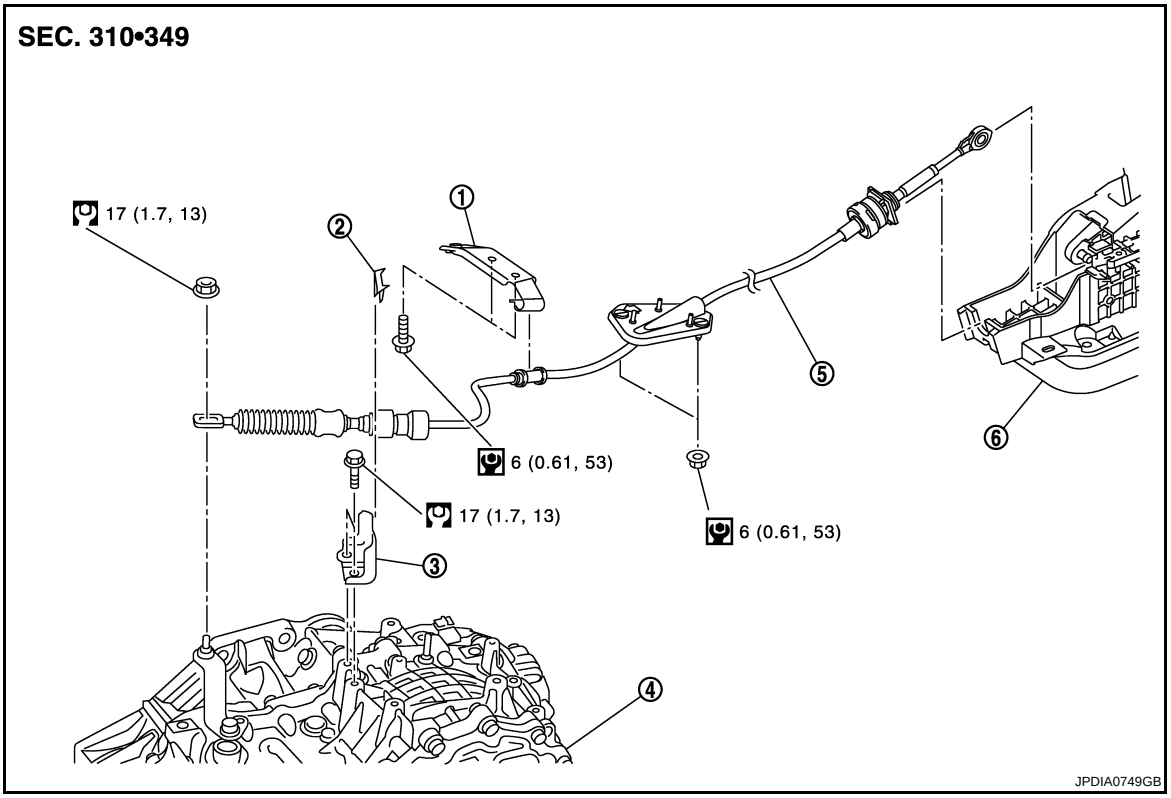

1. Bracket 1
2. Lock plate
3. Bracket 2
4. Transaxle assembly
5. Control cable
6. Control device assembly

Refer to GI-4, "Components" for symbols in the figure.

Removal and Installation

INFOID:0000000003849092

REMOVAL

CAUTION:

Check that parking brake is applied before removal/installation.

1. Disconnect control cable from control device assembly. Refer to TM-155, "Exploded View".
2. Remove the air duct (inlet) and air cleaner case. Refer to EM-26, "Exploded View".
3. Remove control cable (1) from manual lever (A).

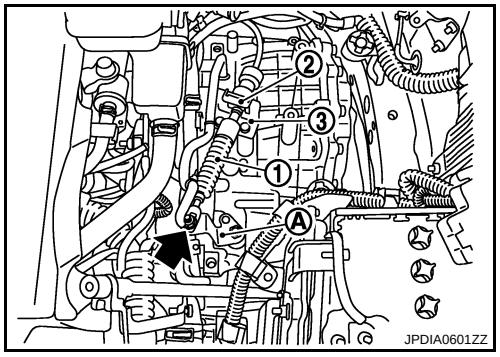

⬅ : Nut

4. Remove lock plate (2) from control cable.
5. Remove control cable from bracket 2 (3).
6. Remove exhaust front tube. Refer to EX-5, "Exploded View".
7. Remove heat plate.

8. Remove control cable (1) from bracket 1 (2).
9. Remove nuts (⬅).

   ⇦ : Vehicle front

10. Remove rear foot duct 1 (right). Refer to VTL-55, "REAR FOOT DUCT 1 : Exploded View".
11. Remove the control cable from the vehicle.

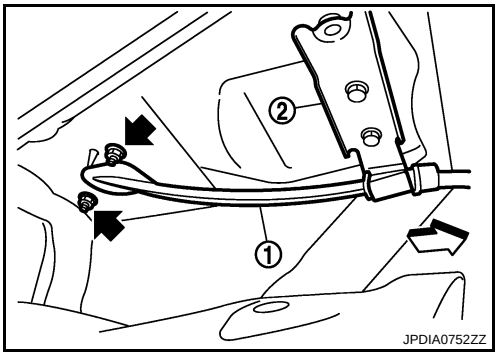

INSTALLATION

Note the following, and install in the reverse order of removal.

When installing the control cable (1) to the control device assembly (2), make sure that the control cable is fully pressed in with the ribbed (A) surface facing upward.

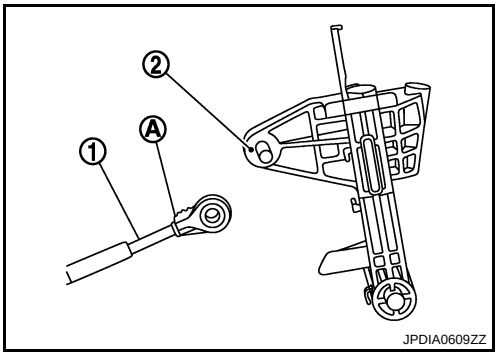

Inspection and Adjustment

INFOID:0000000003849093

ADJUSTMENT AFTER INSTALLATION

Adjust the CVT positions after installing control cable. Refer to TM-152, "Inspection and Adjustment".

INSPECTION AFTER INSTALLATION

Check the CVT positions after adjusting the CVT positions. Refer to TM-152, "Inspection and Adjustment".

OIL PAN

Exploded View

INFOID:0000000003849094

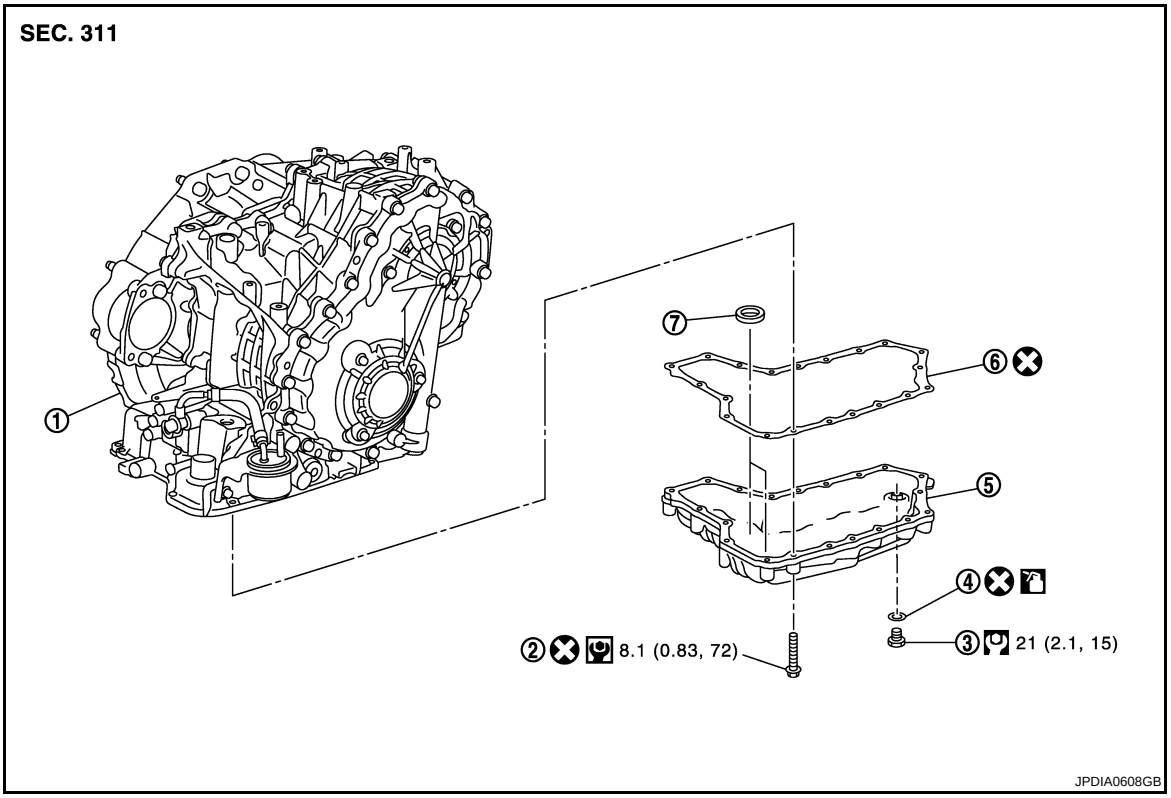

1. Transaxle assembly
2. Oil pan fitting bolt
3. Drain plug
4. O-ring
5. Oil pan
6. Oil pan gasket
7. Magnet

: Apply CVT Fluid NS-2.

Refer to GI-4, "Components" for symbols in the figure.

Removal and Installation

INFOID:0000000003849095

REMOVAL

1. Remove drain plug.
2. Remove O-ring from drain plug.
3. Remove oil pan fitting bolts (⬅).

⇦ : Vehicle front

4. Remove oil pan.

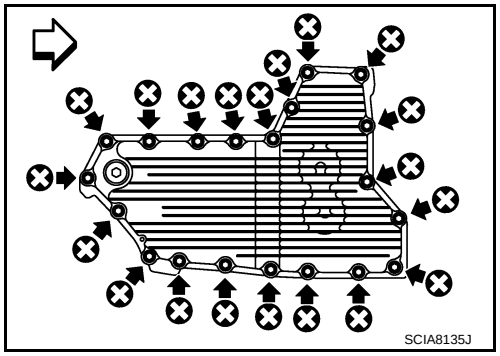

5. Remove oil pan gasket (1) from oil pan (2).
6. Remove magnet (3) from oil pan.

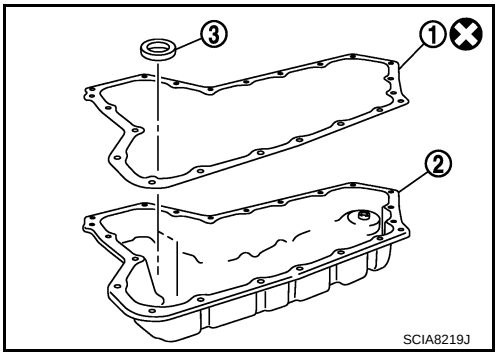

INSTALLATION

Note the following, and install in the reverse order of removal.

CAUTION:

- **Completely remove all moisture, oil and old gasket, etc. from the oil pan gasket mounting surface of transaxle case and oil pan.**
- **Never reuse oil pan gasket, O-ring and oil pan fitting bolts.**
- **Apply CVT fluid to O-ring.**

Inspection

INFOID:0000000003849096

Check foreign materials in oil pan to help determine causes of malfunction. If the CVT fluid is very dark, smells burned, or contains foreign particles, frictional material (clutches) may need replacement. A tacky film that will not wipe clean indicates varnish build up. Varnish can cause valves and clutches to stick and can inhibit pump pressure.

INSPECTION AFTER INSTALLATION

Check for CVT fluid leakage and check CVT fluid level. Refer to TM-142, "Inspection".

SECONDARY SPEED SENSOR

Exploded View

INFOID:0000000003849097

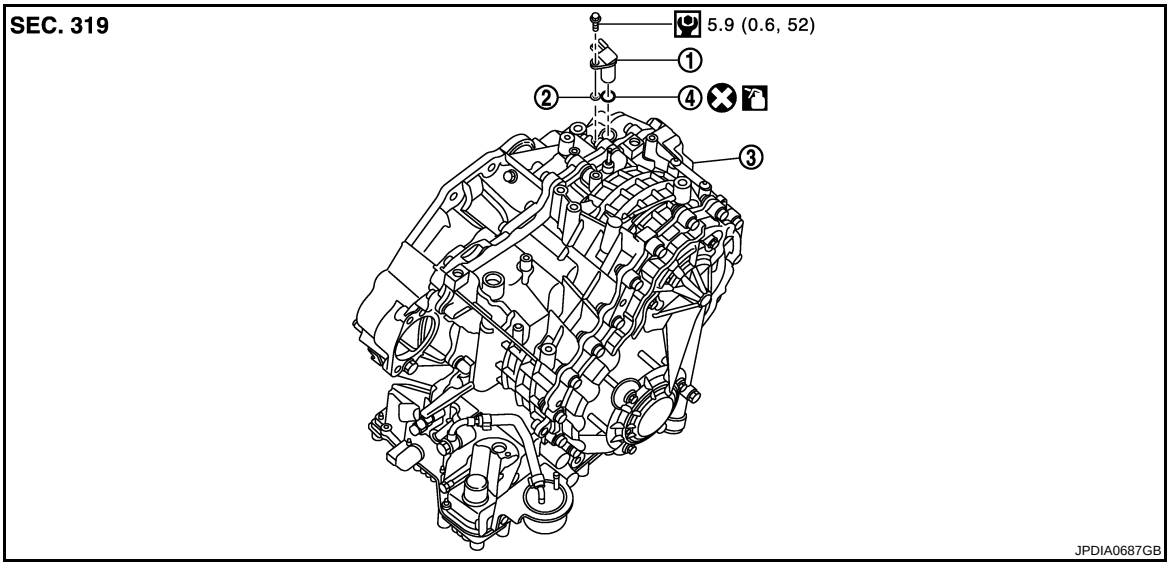

1. Secondary speed sensor
2. Shim
3. Transaxle assembly
4. O-ring

: Apply CVT Fluid NS-2.

Refer to GI-4, "Components" for symbols not described above.

Removal and Installation

INFOID:0000000003849098

REMOVAL

1. Disconnect the battery cable from negative terminal.
2. Remove air duct (inlet) and air cleaner case. Refer to EM-26, "Exploded View".
3. Disconnect secondary speed sensor connector.
4. Remove secondary speed sensor (1) and shim (2).
   CAUTION:
   Never lose the shim.
5. Remove O-ring (3) from secondary speed sensor.

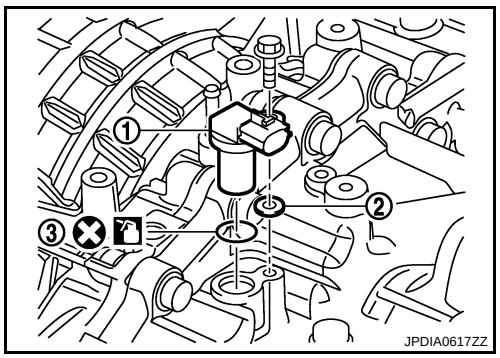

INSTALLATION

Note the following, and install in the reverse order of removal.

CAUTION:

- **Never reuse O-ring.**
- **Apply CVT fluid to O-ring.**

Inspection

INFOID:0000000003849099

After completing installation, check for CVT fluid leakage and check CVT fluid level. Refer to TM-142, "Inspection".

DIFFERENTIAL SIDE OIL SEAL

Exploded View

INFOID:0000000003849100

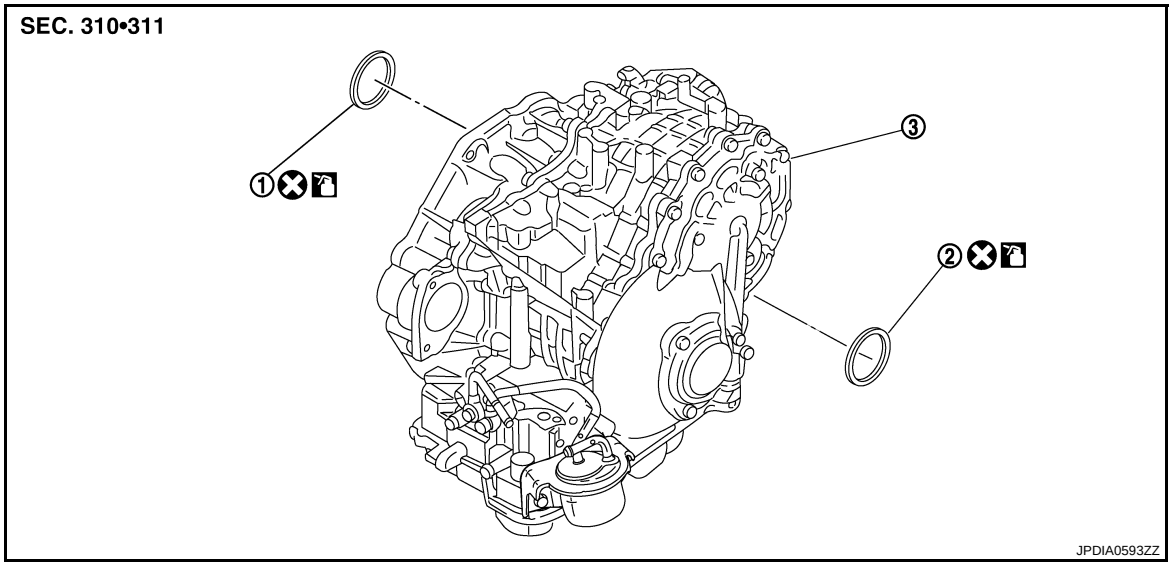

1. RH differential side oil seal
2. LH differential side oil seal
3. Transaxle assembly

: Apply CVT Fluid NS-2.

Refer to GI-4, "Components" for symbols not described above.

Removal and Installation

INFOID:0000000003849101

REMOVAL

1. Remove front drive shafts. Refer to FAX-16, "Exploded View".
2. Remove differential side oil seals (1) using a flat-bladed screwdriver (A).
   CAUTION:
   Be careful not to scratch transaxle case and converter housing.

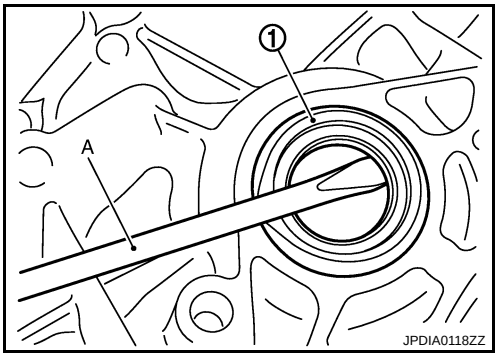

INSTALLATION

Note the following, and install in the reverse order of removal.

- Drive each differential side oil seal evenly using a commercial service tool so that differential side oil seal protrudes by the dimension (C) respectively.

A : Transaxle case side

B : Converter housing side

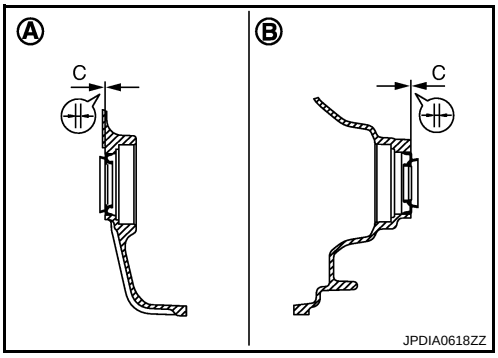

Unit: mm (in)

Dimension C	0 ± 0.5 (0 ± 0.020)

NOTE:
Differential side oil seal pulling direction is used as the reference.

CAUTION:

- **Never reuse differential side oil seals.**

- **Apply CVT fluid to differential side oil seals.**

Drift to be used:

Location	Tool number
Transaxle case side	ST33400001
Converter housing side	

Inspection

INFOID:0000000003849102

After completing installation, check for CVT fluid leakage and check CVT fluid level. Refer to TM-142, "Inspection".

AIR BREATHER HOSE

Exploded View

INFOID:0000000003849103

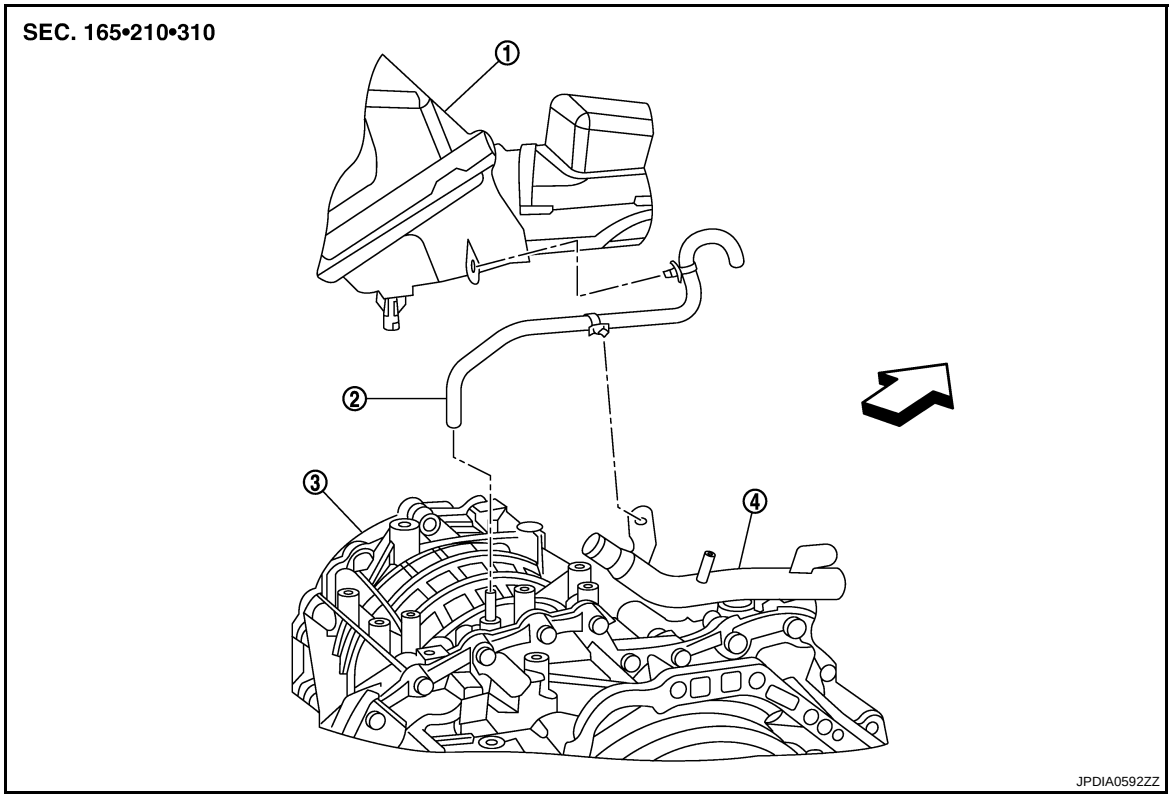

1. Air cleaner case
2. Air breather hose
3. Transaxle assembly
4. Heater pipe

⇦ : Vehicle front

Removal and Installation

INFOID:0000000003849104

REMOVAL

1. Remove air duct (inlet) and air cleaner case. Refer to EM-26, "Exploded View".
2. Remove air breather hose from transaxle assembly.

INSTALLATION

Note the following, and install in the reverse order of removal.

CAUTION:

Check that air breather hose is not collapsed or blocked due to folding or bending when installed.

- Install air breather hose to air breather tube so that the paint mark (A) faces upward. Also insert hose to the bend of air breather tube.

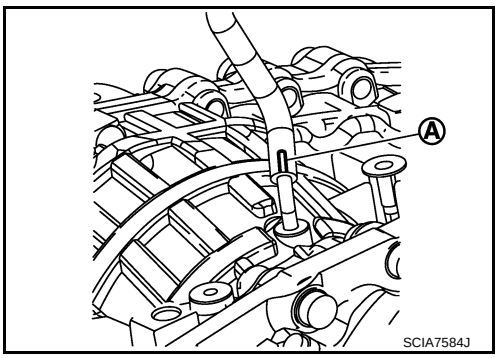

FLUID COOLER SYSTEM

Exploded View

INFOID:0000000003849105

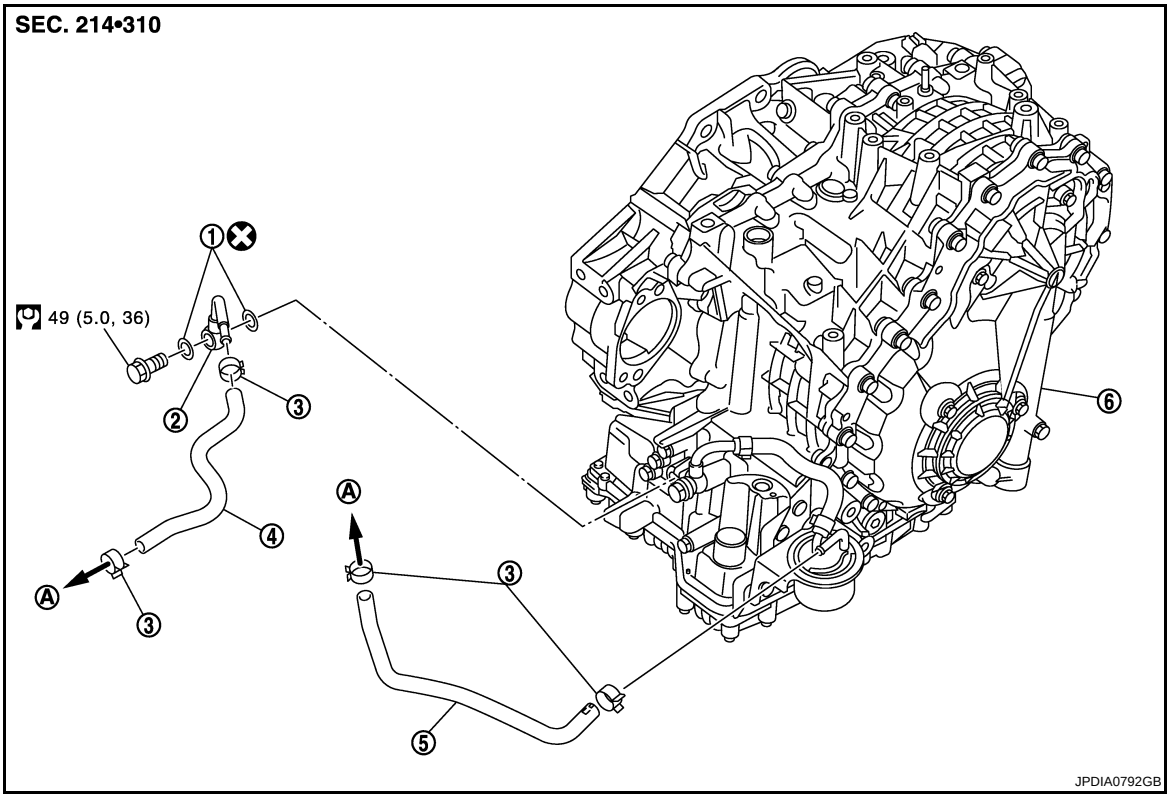

1. Copper washer
2. Fluid cooler tube
3. Hose clamp
4. Fluid cooler hose A
5. Fluid cooler hose B
6. Transaxle assembly

A. To radiator assembly

Refer to GI-4, "Components" for symbols in the figure.

Removal and Installation

INFOID:0000000003849106

REMOVAL

1. Remove front under cover.
2. Remove fender protector (left side).
3. Remove air duct (inlet). Refer to EM-26, "Exploded View".
4. Remove fluid cooler hose A and fluid cooler hose B.
5. Remove fluid cooler tube.

INSTALLATION

Note the following, and install in the reverse order of removal.
When installing CVT fluid cooler tube (1) to transaxle assembly:

- Contact CVT fluid cooler tube to a boss portion (A) of the transaxle case.
- Tighten the bolt of CVT fluid cooler tube without moving the CVT fluid cooler tube.

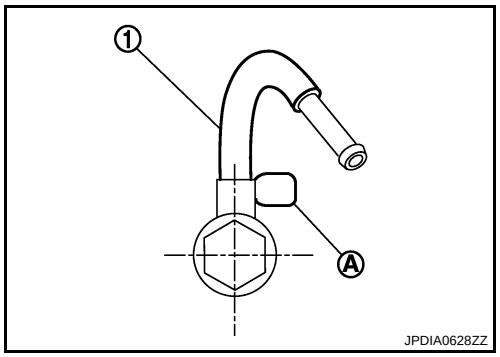

CVT water hose	Hose end	Paint mark	Position of hose clamp*
Fluid cooler hose A	Radiator assembly	Facing upward	A
	Fluid cooler tube	Facing upward	C
Fluid cooler hose B	Radiator assembly	Facing backward	B
	Transaxle assembly	Facing upward	C

*: Refer to the illustrations for the specific position of each hose clamp tab.

- The illustrations indicate the view from the hose ends.

  ⇦ D: Vehicle front

  ⇦ E: Vehicle upper

- When installing hose clamps the center line of each clamp tab should be positioned as shown in the figure.

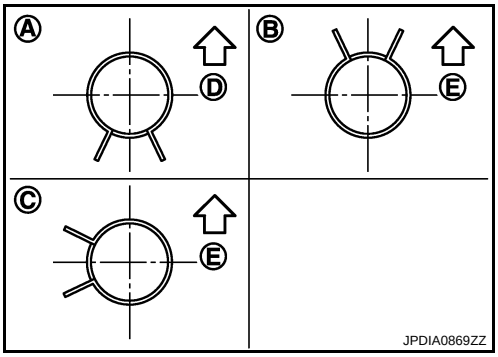

- Insert CVT water hose according to dimension (ℓ) described below.

(1)	(2)	Tube type	Dimension ℓ
Fluid cooler hose A	Radiator assembly	A	30 mm (1.18 in) (Insert the hose until the hose touches the radiator)
	Fluid cooler tube	B	End reaches the tube bend R position.
Fluid cooler hose B	Radiator assembly		
	Transaxle assembly		

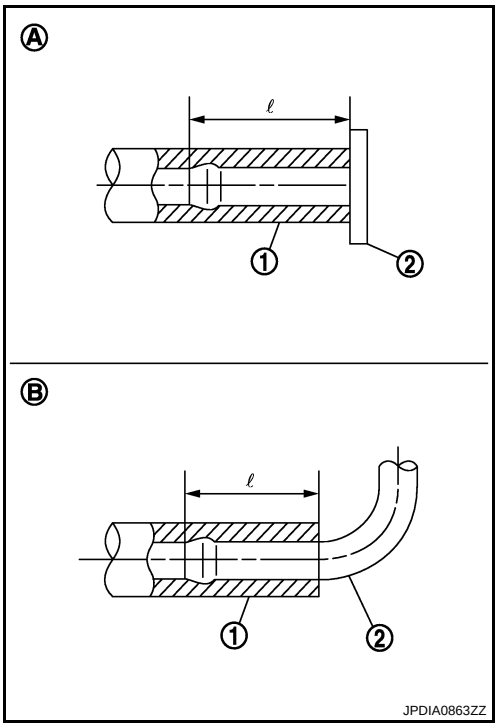

- Set hose clamps (1) at the both ends of fluid cooler hose (2) with dimension (A) from the hose edge.

  Dimension (A) : 5 – 9 mm (0.20 – 0.35 in)

- Hose clamp should not interfere with the bulge.

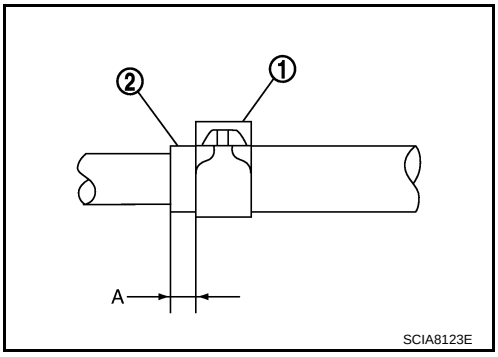

Inspection

INFOID:0000000003849107

After completing installation, check for engine coolant leakage and check engine coolant level. Refer to CO-8, "Inspection".

REMOVAL AND INSTALLATION

TRANSAXLE ASSEMBLY

Exploded View

INFOID:0000000003849108

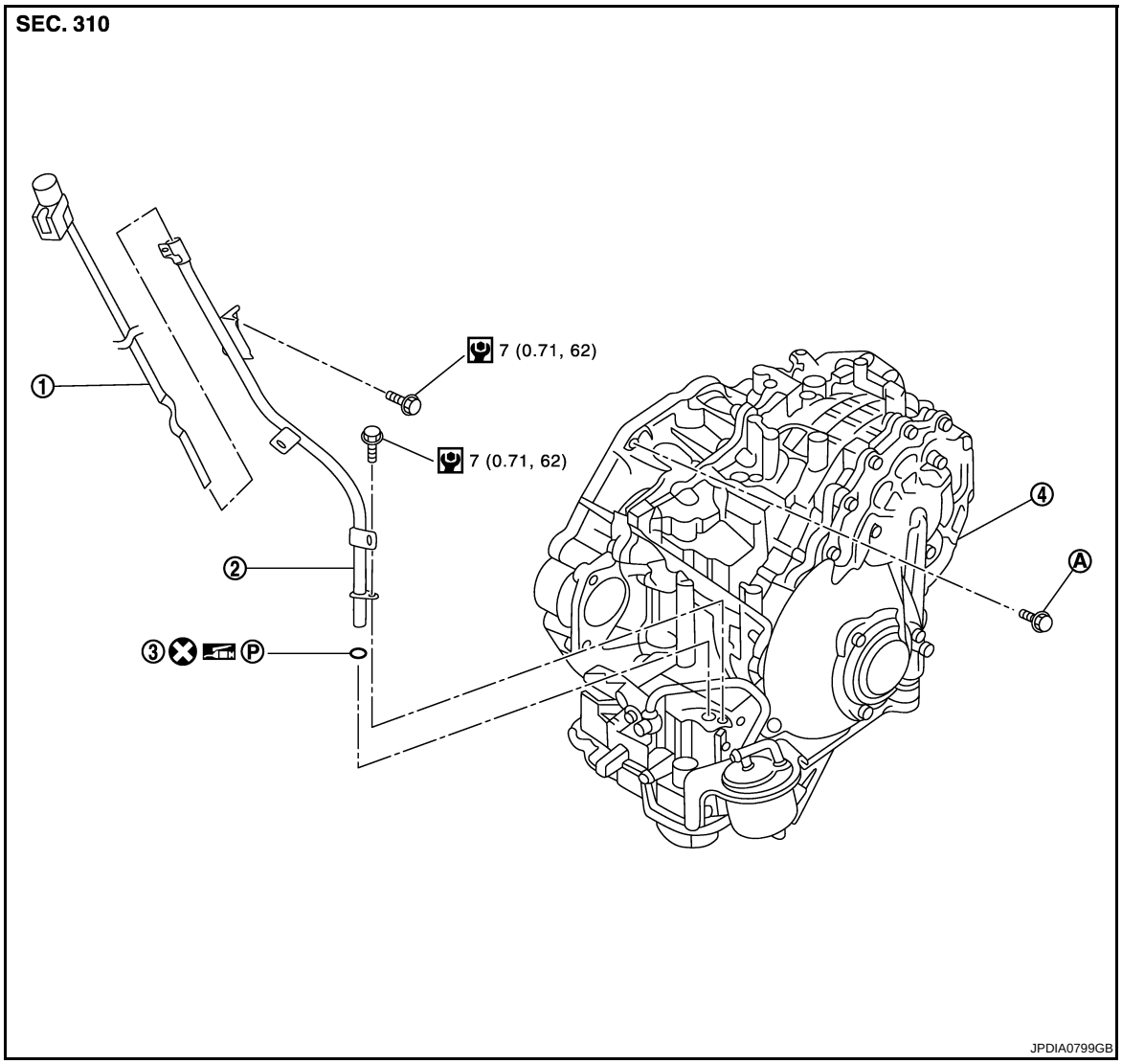

1. CVT fluid level gauge
2. CVT fluid charging pipe
3. O-ring
4. Transaxle assembly

A. For tightening torque, refer to TM-168, "Removal and Installation".

Refer to GI-4, "Components" for symbols in the figure.

Removal and Installation

INFOID:0000000003849109

WARNING:
Never remove the reservoir tank cap when the engine is hot. Serious burns could occur from high pressure engine coolant escaping from the reservoir tank.

REMOVAL

1. Remove the engine, the transaxle assembly and front suspension member. Refer to EM-67, "Exploded View".
2. Lift with hoist and separate engine, transaxle assembly from front suspension member. Refer to EM-67, "Exploded View".

3. Remove air breather hose. Refer to TM-164, "Exploded View".
4. Disconnect secondary speed sensor connector. Refer to TM-161, "Exploded View".
5. Disconnect CVT unit connector.
6. Disconnect air fuel ratio sensor 1 (bank 2). Refer to EM-34, "Exploded View".
7. Remove crankshaft position sensor (POS). Refer to EM-38, "Exploded View".
8. Remove CVT fluid charging pipe from transaxle assembly.
9. Remove transaxle assembly fixing bolts with power tool.
10. Remove transaxle assembly from engine assembly with a hoist.
11. Remove fluid cooler hose from transaxle assembly.

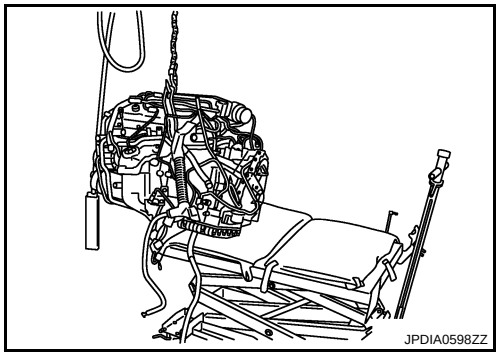

INSTALLATION

Note the following, and install in the reverse order of removal.

CAUTION:

Check fitting of dowel pins (⬅) when installing transaxle assembly to engine assembly.

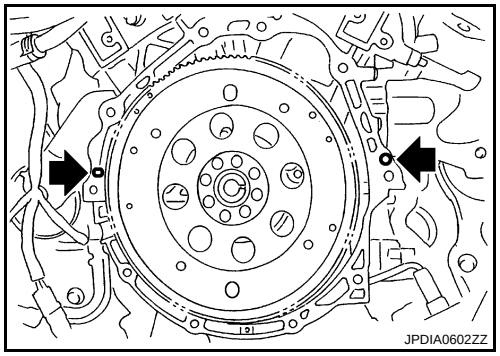

When installing transaxle assembly to the engine assembly, attach the fixing bolts in accordance with the following.

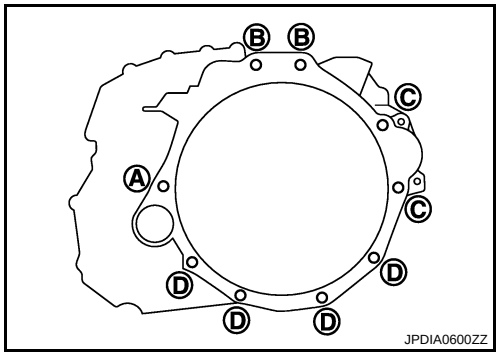

Insertion direction	Transaxle assembly to engine assembly			Engine assembly to transaxle assembly
Bolt position	A	B	C	D
Number of bolts	1	2	2	4
Bolt length mm (in)	55 (2.17)	39 (1.54)	108 (4.25)	40 (1.57)
Tightening torque N·m (kg-m, ft-lb)	74.5 (7.6, 55)			50 (4.3, 31)

- When using the drive plate location guide (commercial service tool: 31197CA000) (A), set it to the stud bolts which is used to install it to the torque converter.
- When not using drive plate location guide, rotate torque converter so that the stud bolt (B) for mounting the drive plate location guide of torque converter aligns with the mounting position of service hole.

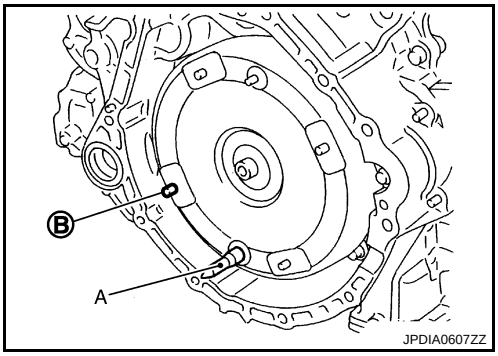

- Rotate crankshaft so that the hole (A) for inserting drive plate location guide of drive plate aligns with the service hole (B).
  NOTE:
  When not using drive plate location guide, insert stud bolt of torque converter into the hole (C) of drive plate, aligning the drive plate hole position and torque converter.
  CAUTION:
  Be careful not to strike the drive plate when installing the torque converter stud bolt.

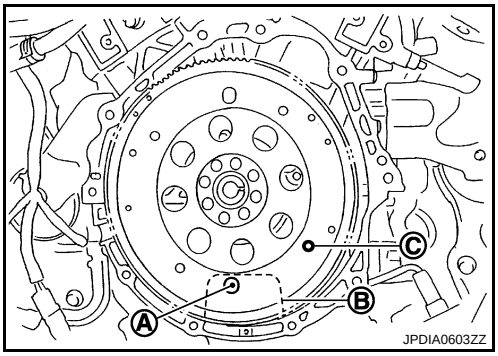

- Align the position of tightening nuts (⬅) for drive plate with those of the torque converter, and temporarily tighten the nuts. Then, tighten the bolts to the specified torque.

  : 51 N·m (5.2 kg-m,38 ft-lb)

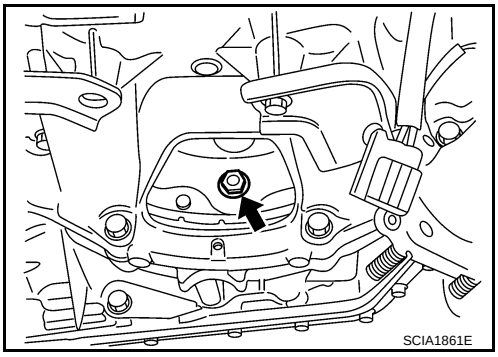

CAUTION:
- **When turning crankshaft, turn it clockwise as viewed from the front of the engine.**
- **When tightening the nuts for the torque converter after fixing the crankshaft pulley bolts, confirm the tightening torque of the crankshaft pulley mounting bolts. Refer to EM-79, "Exploded View".**
- **Rotate crankshaft several turns and check that transaxle rotates freely without binding after converter is installed to drive plate.**
- **Never reuse O-ring.**
- **Apply petroleum jelly to O-ring.**

Inspection

INFOID:0000000003849110

INSPECTION BEFORE INSTALLATION

After inserting a torque converter to transaxle assembly, check that distance (A) is within the reference value limit.

B : Scale
C : Straightedge

Distance A : Refer to TM-175, "Torque Converter".

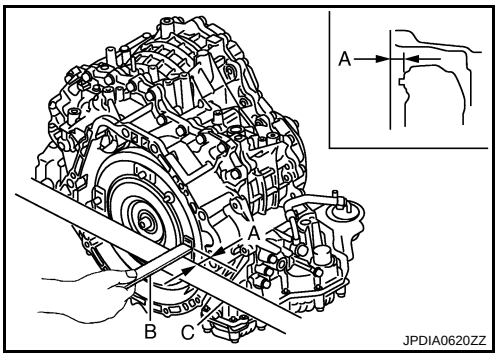

INSPECTION AFTER INSTALLATION

Check the following items.

- CVT fluid leakage and CVT fluid level. Refer to TM-142, "Inspection".
- CVT position. Refer to TM-152, "Inspection and Adjustment".

DISASSEMBLY AND ASSEMBLY

TORQUE CONVERTER

Exploded View

INFOID:0000000003849111

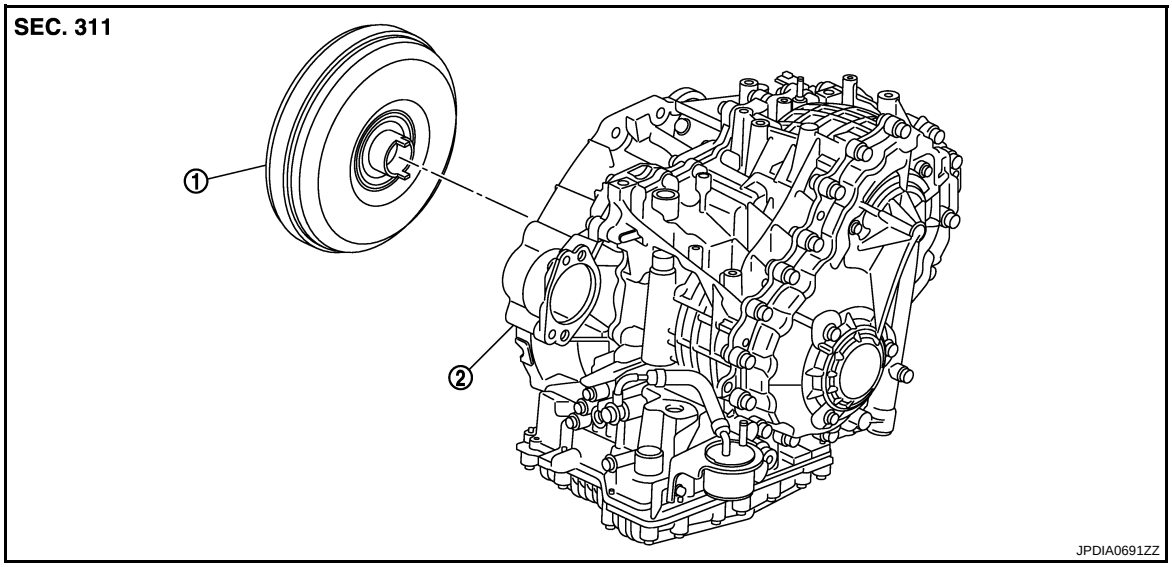

1. Torque converter
2. Transaxle assembly

Disassembly

INFOID:0000000003849112

1. Remove transaxle assembly. Refer to TM-168, "Exploded View".
2. Remove torque converter from transaxle assembly.

Assembly

INFOID:0000000003849113

Note the following, and install in the reverse order of removal.

- Attach the pawl (A) of the torque converter to the inner gear hole (B) on the oil pump side.
  CAUTION:
  Rotate the torque converter for installing torque converter.

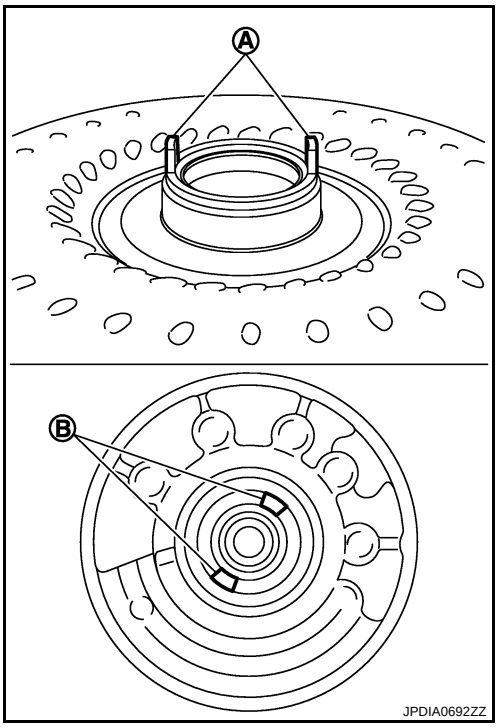

Inspection

INFOID:0000000003849114

INSPECTION AFTER INSTALLATION

After inserting a torque converter to transaxle assembly, check distance (A) is within the reference value limit.

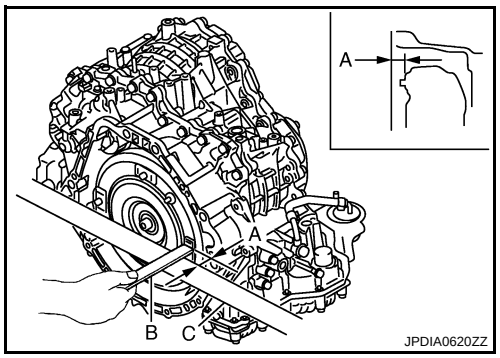

B : Scale

C : Straightedge

Distance A : Refer to TM-175, "Torque Converter".

SERVICE DATA AND SPECIFICATIONS (SDS)

SERVICE DATA AND SPECIFICATIONS (SDS)

General Specification

INFOID:0000000003849115

Applied model		VQ35DE
		2WD
CVT model		RE0F09B
CVT assembly model code number		1XE0A
Transmission gear ratio	D range	Variable
	Reverse	1.766
	Final drive	5.173
Recommended fluid		Genuine NISSAN CVT Fluid NS-2*
Fluid capacity		10.2 liter (9 Imp qt)

CAUTION:
- **Use only Genuine NISSAN CVT Fluid NS-2. Do not mix with other fluid.**
- **Using CVT fluid other than Genuine NISSAN CVT Fluid NS-2 will deteriorate in driveability and CVT durability, and may damage the CVT, which is not covered by the warranty.**

*: Refer to MA-11, "Fluids and Lubricants".

Vehicle Speed When Shifting Gears

INFOID:0000000003849116

Numerical value data are reference values.

(rpm)

Throttle position	Shift pattern	Engine speed	
		At 40 km/h (25 MPH)	At 60 km/h (37 MPH)
8/8	“D” position	2,900 – 4,100	3,900 – 5,600
	Sport mode	2,900 – 4,100	3,900 – 5,600
	“L” position	2,900 – 4,100	3,900 – 5,600
2/8	“D” position	1,100 – 3,100	1,200 – 3,700
	Sport mode	2,200 – 3,000	2,800 – 3,600
	“L” position	2,900 – 3,800	3,900 – 4,800

CAUTION:

Lock-up clutch is engaged when vehicle speed is approximately 18 km/h (11 MPH) to 90 km/h (56 MPH).

Stall Speed

INFOID:0000000003849117

Stall speed	2,700 – 3,500 rpm

Line Pressure

INFOID:0000000003849118

kPa (bar, kg/cm^2, psi)

Engine speed	Line pressure
	“R”, “D” and “L” positions
At idle	700 (7.00, 7.13, 101.5)
At stall	5,700 (57.00, 58.14, 826.5)

Solenoid Valves

INFOID:0000000003849119

Name	Resistance (Approx.)
Pressure control solenoid valve B (secondary pressure solenoid valve)	3.0 – 9.0 Ω
Pressure control solenoid valve A (line pressure solenoid valve)	
Torque converter clutch solenoid valve	
Lock-up select solenoid valve	6.0 – 19.0 Ω

CVT Fluid Temperature Sensor

INFOID:0000000003849120

Name	Condition	CONSULT-III “Data Monitor” (Approx.)	Resistance (Approx.)
CVT fluid temperature sensor	When CVT fluid temperature is 20°C (68°F)	1.9 – 2.2 V	6.5 kΩ
	When CVT fluid temperature is 80°C (176°F)	0.8 – 1.1 V	0.9 kΩ

Primary Speed Sensor

INFOID:0000000003849121

Name	Condition	Data (Approx.)
Primary speed sensor	When driving at 20 km/h (12 MPH) in “L” position, use the CONSULT-III pulse frequency measuring function.	680 Hz

Secondary Speed Sensor

INFOID:0000000003849122

Name	Condition	Data (Approx.)
Secondary speed sensor	When driving at 20 km/h (12 MPH) in “D” position, use the CONSULT-III pulse frequency measuring function.	400 Hz

Step Motor

INFOID:0000000003849123

Name	Resistance (Approx.)
Step motor A	15.0 Ω
Step motor B	15.0 Ω
Step motor C	15.0 Ω
Step motor D	15.0 Ω

Torque Converter

INFOID:0000000003849124

Distance between end of converter housing and torque converter	14.0 mm (0.55 in)

BASIC INSPECTION

DIAGNOSIS AND REPAIR WORK FLOW

Work Flow

INFOID:0000000003806344

INTRODUCTION

The TCM receives signals from the vehicle speed sensor and PNP switch. Then it provides shift control or lock-up control via CVT solenoid valves.

The TCM also communicates with the ECM by means of signals sent from sensing elements used with the OBD-related parts of the CVT system for malfunction-diagnostic purposes. The TCM is capable of diagnosing malfunctioning parts while the ECM can store malfunctions in its memory.

Input and output signals must always be correct and stable in the operation of the CVT system. The CVT system must be in good operating condition and be free of valve seizure, solenoid valve malfunction, etc.

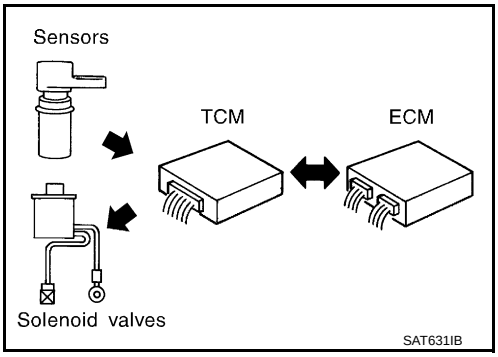

It is much more difficult to diagnose a malfunction that occurs intermittently rather than continuously. Most intermittent malfunctions are caused by poor electric connections or improper wiring. In this case, careful checking of suspected circuits may help prevent the replacement of good parts.

A visual check only may not find the cause of the malfunctions. A road test with CONSULT-III (or GST) or a circuit tester connected should be performed. Follow the “DETAILED FLOW”.

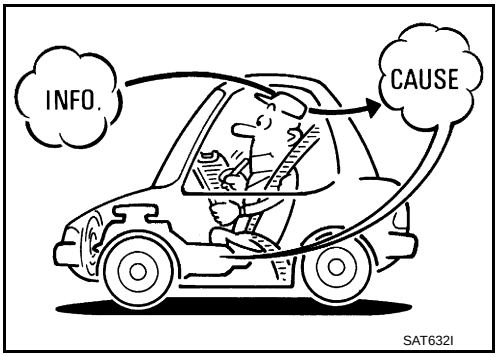

Before undertaking actual checks, take a few minutes to talk with a customer who approaches with a driveability complaint. The customer can supply good information about such malfunctions, especially intermittent ones. Find out what symptoms are present and under what conditions they occur. A “Diagnostic Work Sheet” as shown on the example (Refer to TM-177) should be used.

Start your diagnosis by looking for “conventional” malfunctions first. This will help troubleshoot driveability malfunctions on an electronically controlled engine vehicle.

Also check related Service Bulletins.

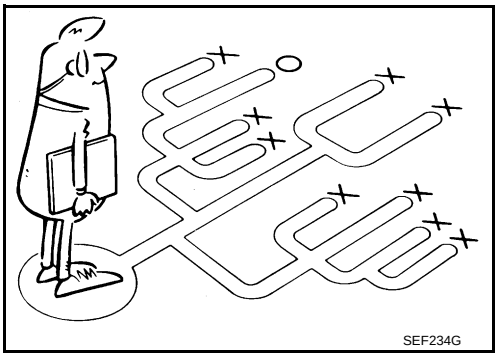

DETAILED FLOW

1. COLLECT THE INFORMATION FROM THE CUSTOMER

Get the detailed information from the customer about the symptom (the condition and the environment when the incident/malfunction occurred) using the diagnosis work sheet. Refer to TM-177, "Diagnostic Work Sheet".

>> GO TO 2.

2. CHECK SYMPTOM 1

Check the following items based on the information obtained from the customer.

- Fail-safe. Refer to TM-283, "Fail-safe".
- CVT fluid inspection. Refer to TM-304, "Inspection".
- Line pressure test. Refer to TM-308, "Inspection and Judgment".

- Stall test. Refer to TM-306, "Inspection and Judgment".

>> GO TO 3.

3. CHECK DTC

1. Check DTC.
2. Perform the following procedure if DTC is detected.

- Record DTC.
- Erase DTC. Refer to TM-202, "Diagnosis Description".

Is any DTC detected?

YES >> GO TO 4.
NO >> GO TO 5.

4. PERFORM DIAGNOSTIC PROCEDURE

Perform “Diagnostic Procedure” for the displayed DTC.

>> GO TO 5.

5. PERFORM DTC CONFIRMATION PROCEDURE

Perform “DTC CONFIRMATION PROCEDURE” for the displayed DTC.

Is DTC detected?

YES >> GO TO 4.
NO >> GO TO 6.

6. CHECK SYMPTOM 2

Confirm the symptom described by the customer.

Is any malfunction present?

YES >> GO TO 7.
NO >> INSPECTION END

7. ROAD TEST

Perform “ROAD TEST”. Refer to TM-310, "Description".

>> GO TO 8.

8. CHECK SYMPTOM 3

Confirm the symptom described by the customer.

Is any malfunction present?

YES >> GO TO 2.
NO >> INSPECTION END

Diagnostic Work Sheet

INFOID:0000000003806345

INFORMATION FROM CUSTOMER

KEY POINTS

- **WHAT**..... Vehicle & CVT model
- **WHEN**..... Date, Frequencies
- **WHERE**..... Road conditions
- **HOW**..... Operating conditions, Symptoms

Customer name MR/MS	Model & Year	VIN
Trans. Model	Engine	Mileage
Malfunction Date	Manuf. Date	In Service Date
Frequency	o Continuous o Intermittent (times a day)	

Symptoms	o Vehicle does not move. (o Any position o Particular position)	
	o No shift	
	o Lock-up malfunction	
	o Shift shock or slip (o N → D o N → R o Lock-up o Any drive position)	
	o Noise or vibration	
	o No pattern select	
	o Others ( )	
Malfunction Indicator (MI)	o Continuously lit	o Not lit

DIAGNOSTIC WORK SHEET

1	o Read the item on cautions concerning fail-safe and understand the customer's complaint.			TM-283
2	o CVT fluid inspection, stall test and line pressure test			
		o CVT fluid inspection		TM-304
			o Leak (Repair leak location.) o State o Amount	
		o Stall test		TM-306, TM-308
			o Torque converter one-way clutch o Reverse brake o Forward clutch o Steel belt o Engine o Line pressure low o Primary pulley o Secondary pulley	
		o Line pressure inspection - Suspected part:		
3	o Perform self-diagnosis.			TM-204
		Enter checks for detected items.		
4	o Perform road test.			TM-310
	4-1.	Check before engine is started		TM-310
	4-2.	Check at idle		TM-311
	4-3.	Cruise test		TM-312
	o Check malfunction phenomena to repair or replace malfunctioning part after completing all road tests. Refer to TM-286, "Symptom Table".			
5	o Drive vehicle to check that the malfunction phenomenon has been resolved.			
6	o Erase the results of the self-diagnosis from the TCM and the ECM.			TM-202, TM-204

INSPECTION AND ADJUSTMENT

ADDITIONAL SERVICE WHEN REPLACING CONTROL UNIT

ADDITIONAL SERVICE WHEN REPLACING CONTROL UNIT : Service After Replacing TCM and Transaxle Assembly

INFOID:0000000003806346

SERVICE AFTER REPLACING TCM AND TRANSAXLE ASSEMBLY

Perform the applicable service according to the following sheet when replacing TCM or transaxle assembly.

CAUTION:

- **Never start the engine until the service is completed.**
- **"TCM-POWER SUPPLY [P1701]" may be indicated soon after replacing TCM or transaxle assembly (after erasing the memory at the pattern B). Restart the self-diagnosis after erasing the self-diagnosis result. Check that no error is detected.**

TCM	CVT assembly	Service pattern
Replace the new unit.	Do not replace the unit.	"PATTERN A"
Do not replace the unit.	Replace either an old unit or new unit.	"PATTERN B"
Replace the old unit.	Do not replace the unit.	
	Replace either an old unit or new unit.	
Replace the new unit.	Replace either an old unit or new unit.	"PATTERN C"

NOTE:

Old unit means that the unit has been already used for another vehicle.

PATTERN A

1. Shift the selector lever to "P" position after replacing TCM. Turn the ignition switch ON.
2. Check that the shift position indicator in the combination meter turns ON (It indicates approximately 1 or 2 seconds after turning the ignition switch ON.)
   - Check the following items if the shift position indicator does not turn ON. Repair or replace the shift position indicator if necessary.
   - The harness between TCM and ROM ASSY in the transaxle assembly is open or shorted.
   - Cable disconnected, loosen, or bent from the connector housing.

PATTERN B

1. Turn the ignition switch ON after replacing each part.
2. Start engine.
   CAUTION:
   Never start driving.
3. Select "Data Monitor" mode for "TRANSMISSION".
4. Warm up the transaxle assembly until "ATFTEMP COUNT" indicates 47 [approximately 20°C (68°F)] or more. Turn the ignition switch OFF.
5. Turn the ignition switch ON.
   CAUTION:
   Never start engine.
6. Select "Self Diagnostic Results" mode for "TRANSMISSION".
7. Shift the selector lever to "R" position.
8. Depress slightly the accelerator pedal (Pedal angle: 2/8) while depressing the brake pedal.
9. Perform "Erase".
10. Shift the selector lever to "R" position after replacing TCM. Turn the ignition switch OFF.
11. Wait approximately 10 seconds after turning the ignition switch OFF.
12. Turn the ignition switch ON while shifting the selector lever to "R" position.
    CAUTION:
    Never start engine.
13. Select "Special Function" mode for "TRANSMISSION".
14. Check that the value on "CALIBRATION DATA" is the same as the data after erasing "Calibration Data".

- Restart the procedure from step 3 if the values are not the same.

15. Shift the selector lever to “P” position.
16. Check that the shift position indicator in the combination meter turns ON. (It indicates approximately 1 or 2 seconds after shifting the selector lever to “P” position.)
    - Check the following items if the shift position indicator does not turn ON. Repair or replace the shift position indicator if necessary.
    - The harness between TCM and ROM ASSY in the transaxle assembly is open or shorted.
    - Cable disconnected, loosen, or bent from the connector housing.
    - Power supply and ground of TCM. Refer to TM-249, "Description".

Calibration Data

Data after deletion

Item name	Display value	Item name	Display value
UNIT CLB ID 1	00	GAIN PL	256
UNIT CLB ID 2	00	OFFSET PL	40
UNIT CLB ID 3	00	OFFSET2 PL	0
UNIT CLB ID 4	00	MAP NO SEC	32
UNIT CLB ID 5	00	GAIN SEC	256
UNIT CLB ID 6	00	OFFSET SEC	40
MAP NO LU	33	OFFSET2 SEC	0
GAIN LU	256	MAP NO SL	32
OFFSET LU	40	GAIN SL	256
OFFSET2 LU	0	OFFSET SL	40
MAP NO PL	32	OFFSET2 SL	0

PATTERN C

1. Replace the transaxle assembly first, and then replace TCM.
2. Perform the service of “PATTERN A”.
   (Perform the service of “PATTERN B” if TCM is replaced first.)

FUNCTION DIAGNOSIS

CVT SYSTEM

System Diagram

INFOID:0000000003806347

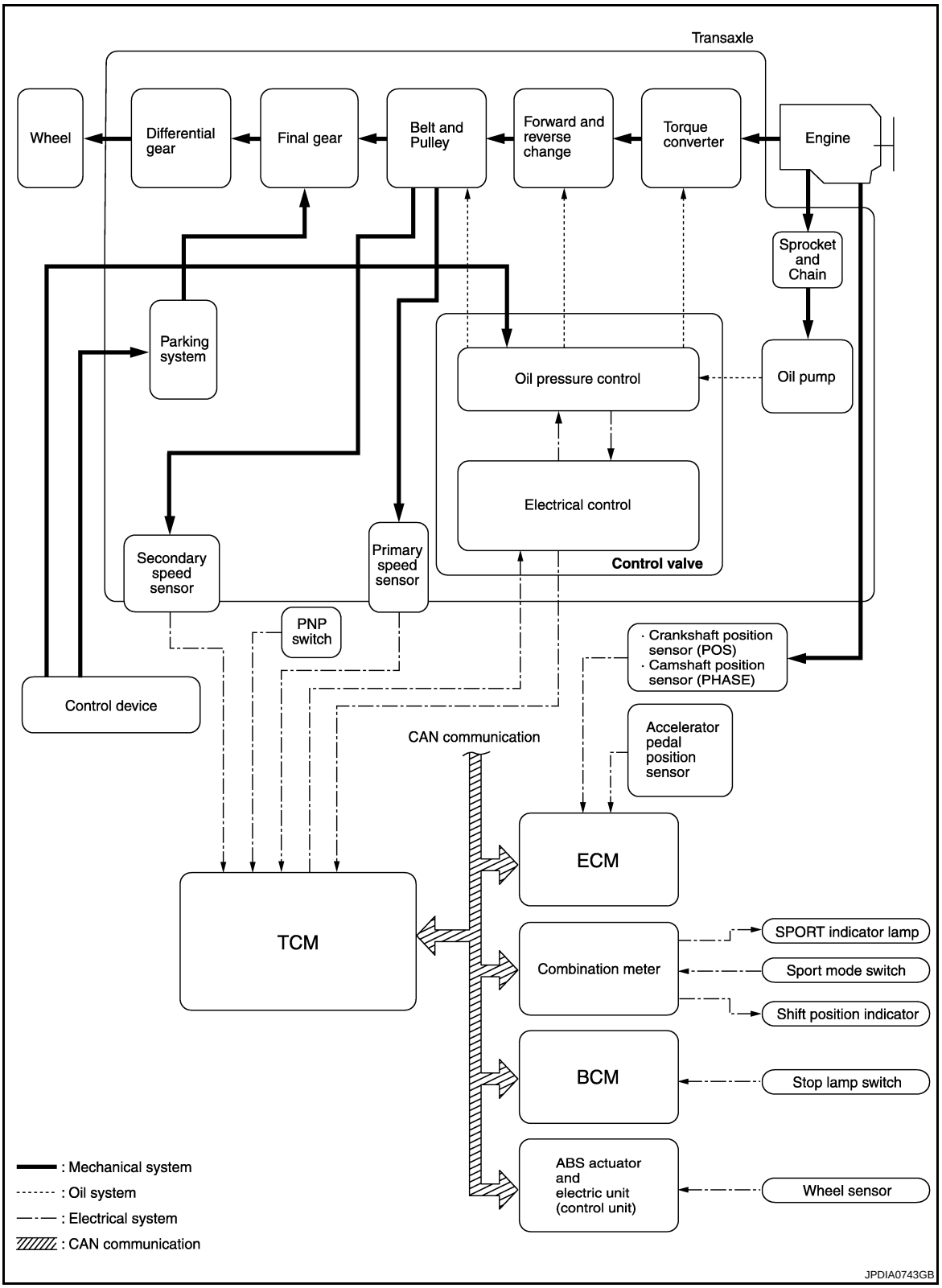

Component Parts Location

INFOID:0000000003806348

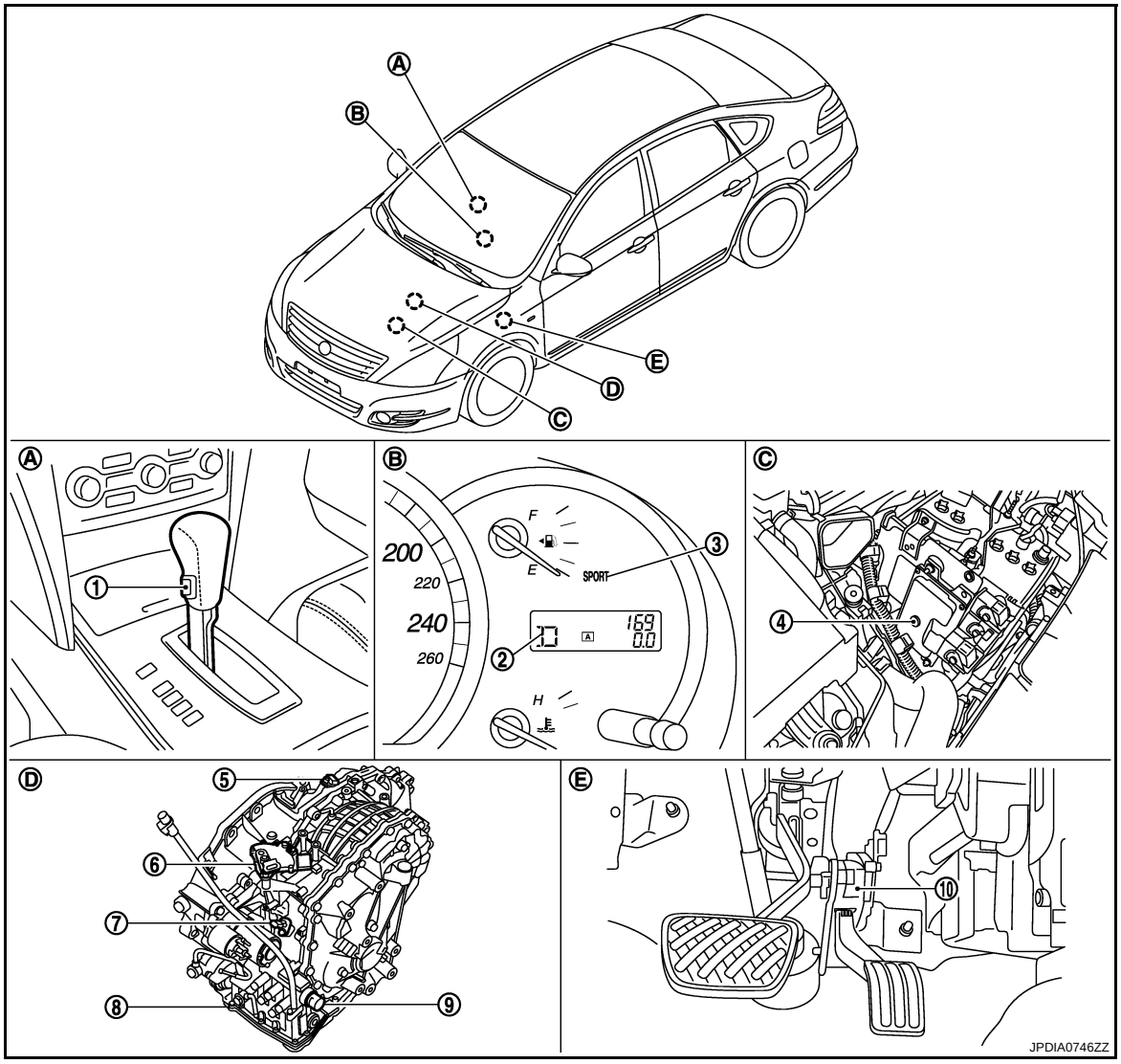

1.	Sport mode switch	2.	Shift position indicator	3.	SPORT indicator lamp
4.	TCM	5.	Secondary speed sensor	6.	PNP switch
7.	Primary speed sensor	8.	Control valve assembly*	9.	CVT unit connector
10.	Accelerator pedal position sensor				
A.	Center console	B.	Combination meter	C.	Engine room LH
D.	CVT assembly	E.	Accelerator pedal, upper		

*: Control valve assembly is included in CVT assembly.

NOTE:

The following components are included in control valve assembly (8).

- CVT fluid temperature sensor
- Torque converter clutch solenoid valve
- Line pressure solenoid valve
- Step motor
- ROM assembly
- Secondary pressure sensor
- Secondary pressure solenoid valve
- Lock-up select solenoid valve

MECHANICAL SYSTEM

Cross-Sectional View

INFOID:0000000003806349

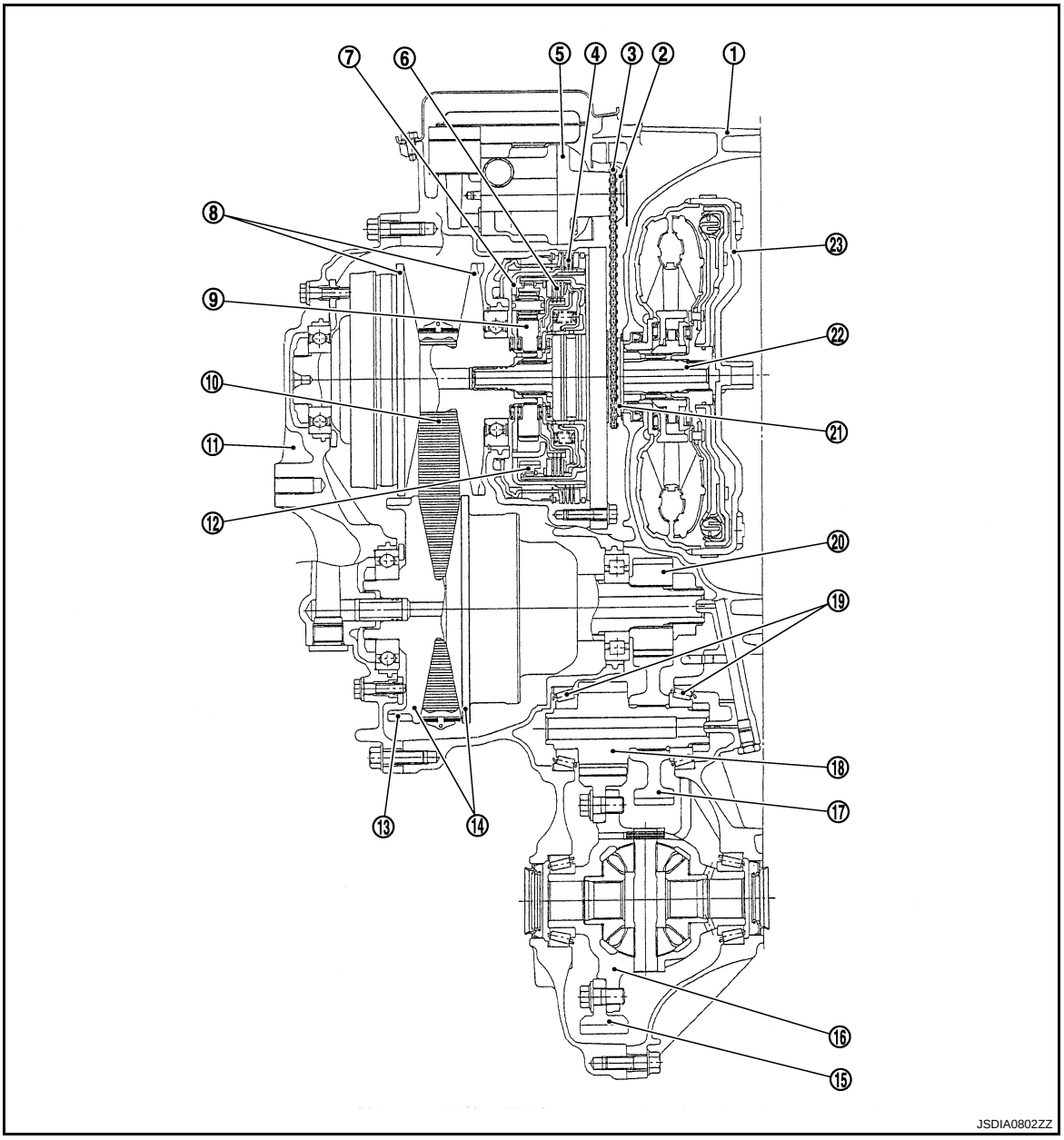

1. Converter housing	2. Driven sprocket	3. Chain
4. Reverse brake	5. Oil pump	6. Forward clutch
7. Planetary carrier	8. Primary pulley	9. Sun gear
10. Steel belt	11. Side cover	12. Internal gear
13. Parking gear	14. Secondary pulley	15. Final gear
16. Differential case	17. Idler gear	18. Reduction gear
19. Taper roller bearing	20. Output gear	21. Drive sprocket
22. Input shaft	23. Torque converter	

System Diagram

INFOID:0000000003806350

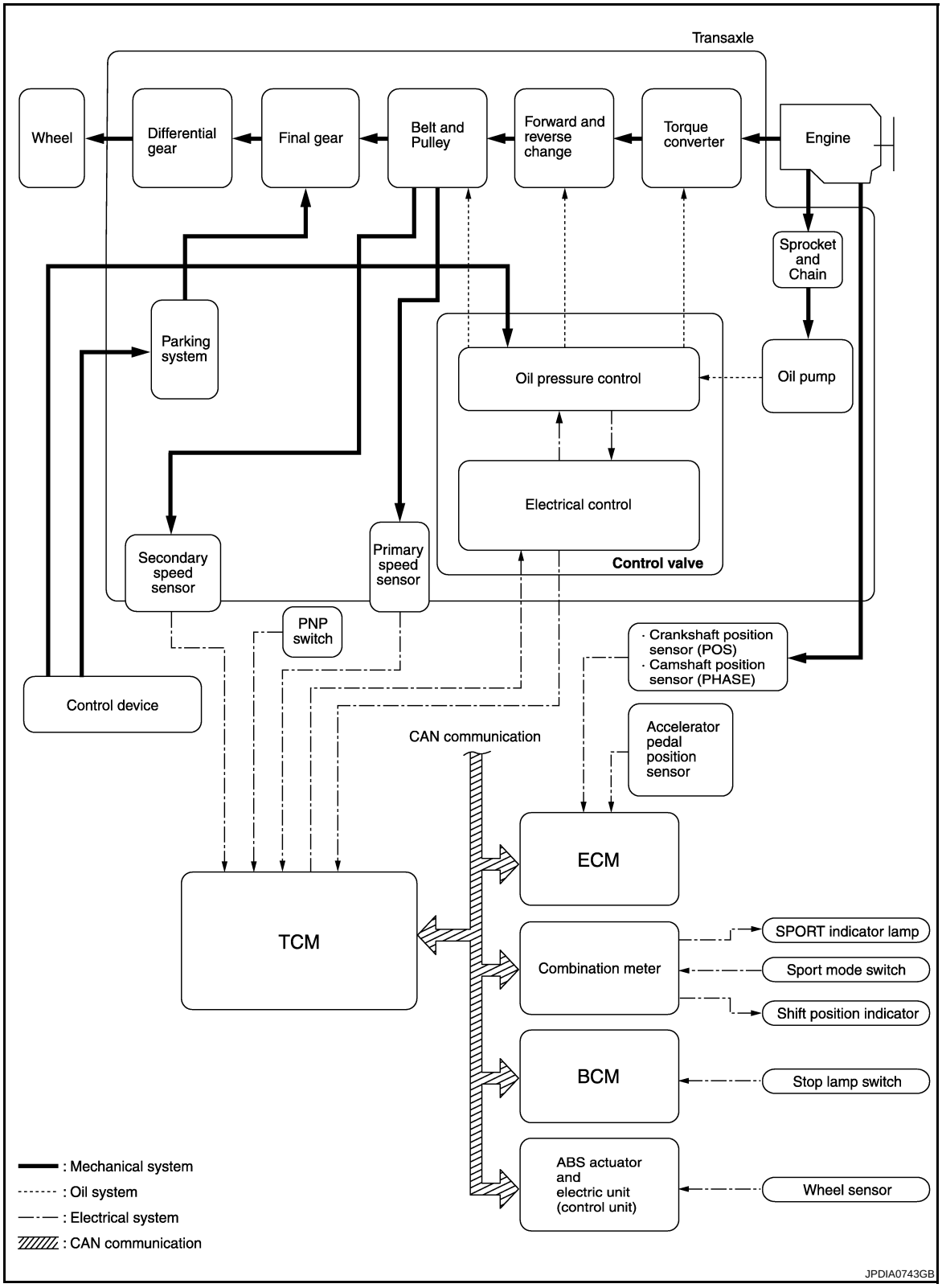

System Description

INFOID:0000000003806351

Transmits the power from the engine to the drive wheel.

Component Parts Location

INFOID:0000000003809651

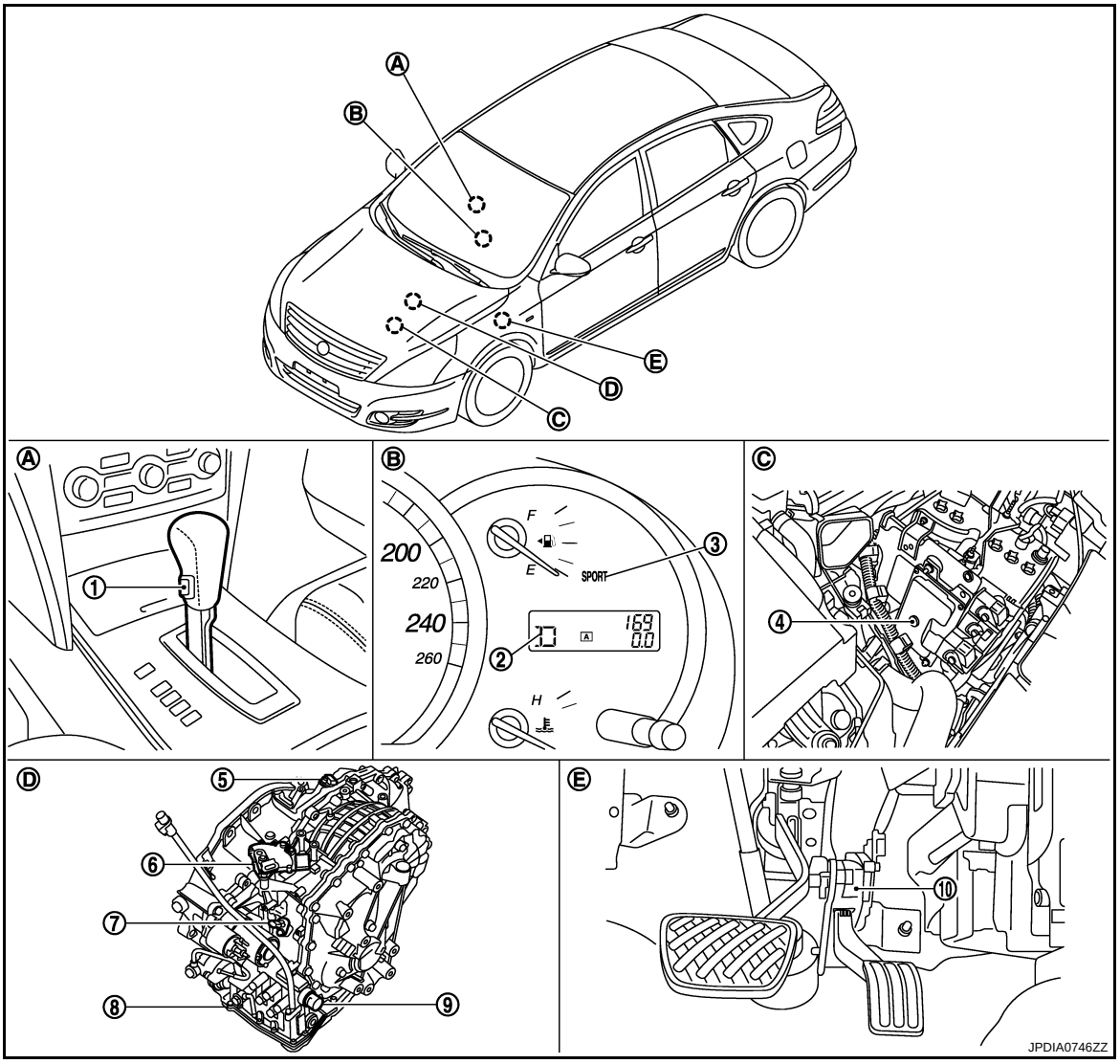

1.	Sport mode switch	2.	Shift position indicator	3.	SPORT indicator lamp
4.	TCM	5.	Secondary speed sensor	6.	PNP switch
7.	Primary speed sensor	8.	Control valve assembly*	9.	CVT unit connector
10.	Accelerator pedal position sensor				
A.	Center console	B.	Combination meter	C.	Engine room LH
D.	CVT assembly	E.	Accelerator pedal, upper		

*: Control valve assembly is included in CVT assembly.

NOTE:

The following components are included in control valve assembly (8).

- CVT fluid temperature sensor
- Torque converter clutch solenoid valve
- Line pressure solenoid valve
- Step motor
- ROM assembly
- Secondary pressure sensor
- Secondary pressure solenoid valve
- Lock-up select solenoid valve

Component Description

INFOID:0000000003806353

Item	Function
Torque converter	The torque converter is the device that increases the engine torque as well as the conventional CVT and transmits it to the transaxle.
Oil pump	The efficiency of pump discharge rate has been increased at low-rpm and optimized at high-rpm by adopting a vane-type oil pump controlled by the engine. Discharged oil from oil pump is transmitted to the control valve. It is used as the oil of primary and secondary pulley operation and the oil of clutch operation and the lubricant for each part.
Planetary gear	Perform the transmission of drive power and the switching of forward/backward movement.
Forward clutch	
Reverse brake	
Primary pulley	It is composed of a pair of pulleys (the groove width is changed freely in the axial direction) and the steel belt (the steel star wheels are placed continuously and the belt is guided with the multilayer steel rings on both sides). The groove width changes according to wrapping radius of steel belt and pulley from low status to overdrive status continuously with non-step. It is controlled with the oil pressures of primary pulley and secondary pulley.
Secondary pulley	
Steel belt	
Output gear	Reduction gear consists of primary deceleration (output gear and idler gear in pair) and secondary deceleration (reduction gear and final gear in pair). Each of them uses a helical gear.
Idler gear	
Reduction gear	
Final gear	
Differential	
Manual shaft	The parking rod rotates the parking pole and the parking pole engages with the parking gear when the manual shaft is in P position. As a result the parking gear and the output axis are fixed.
Parking rod	
Parking pawl	
Parking gear	

HYDRAULIC CONTROL SYSTEM

System Diagram

INFOID:0000000003806354

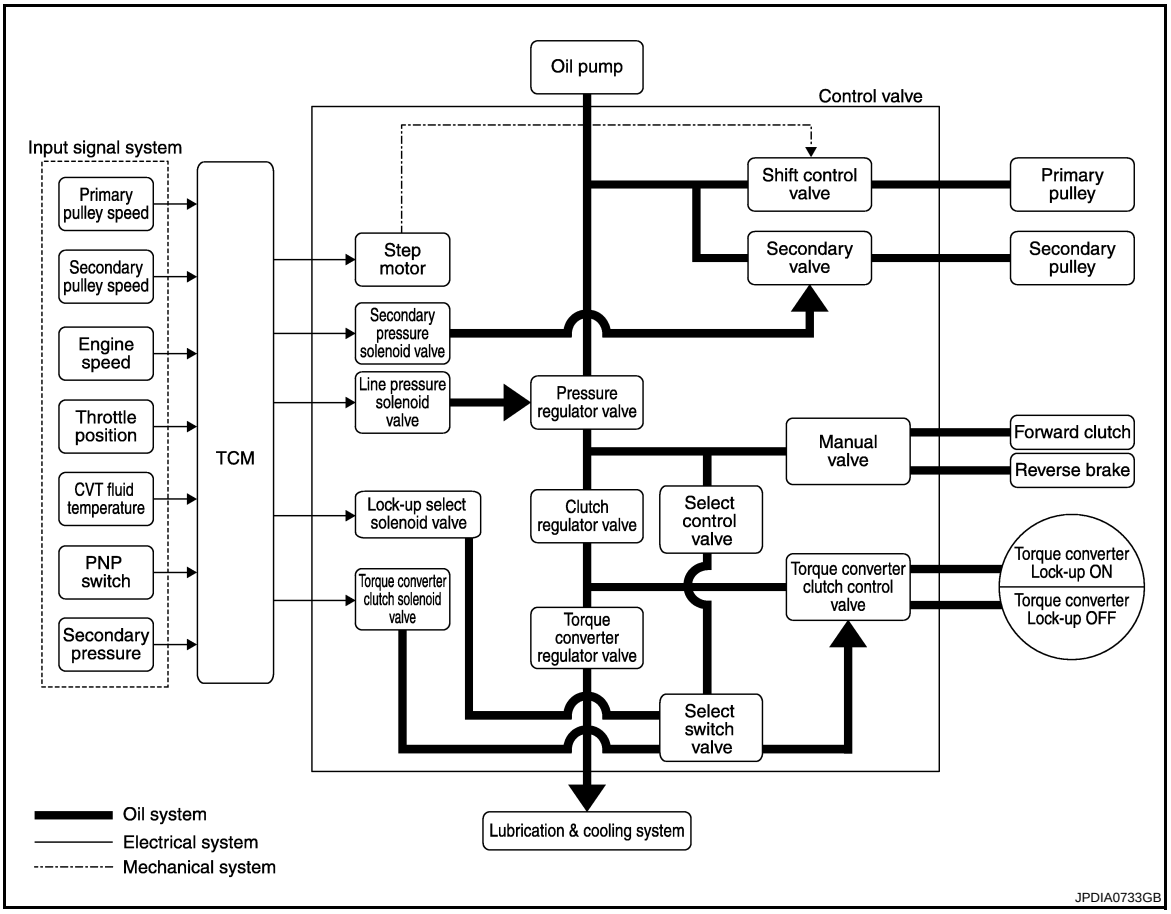

System Description

INFOID:0000000003806355

The hydraulic control mechanism consists of the oil pump directly driven by the engine, the hydraulic control valve that controls line pressure and transmission, and the input signal line.

LINE PRESSURE AND SECONDARY PRESSURE CONTROL

- When an input torque signal equivalent to the engine driving force is transmitted from the ECM to the TCM, the TCM controls the line pressure solenoid valve and secondary pressure solenoid valve.
- Line pressure solenoid valve activates pressure regulator valve, and line pressure from oil pump is adjusted for the optimum driving condition. Secondary pressure is controlled by lowering line pressure.

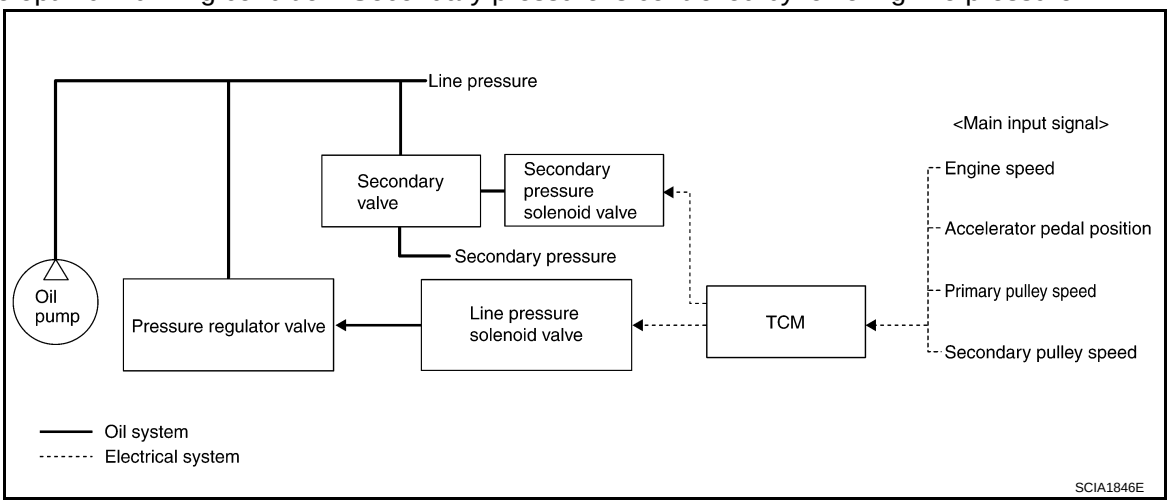

Normal Control

Optimize the line pressure and secondary pressure, depending on driving conditions, on the basis of the throttle position, the engine speed, the primary pulley (input) revolution speed, the secondary pulley (output) revolution speed, the brake signal, the PNP switch signal, the lock-up signal, the voltage, the target gear ratio, the fluid temperature, and the fluid pressure.

Feedback Control

For the normal fluid control and the select fluid control, secondary pressure is detected for feedback control by using a secondary pressure sensor to set a high-precision secondary pressure.

Component Parts Location

INFOID:0000000003809652

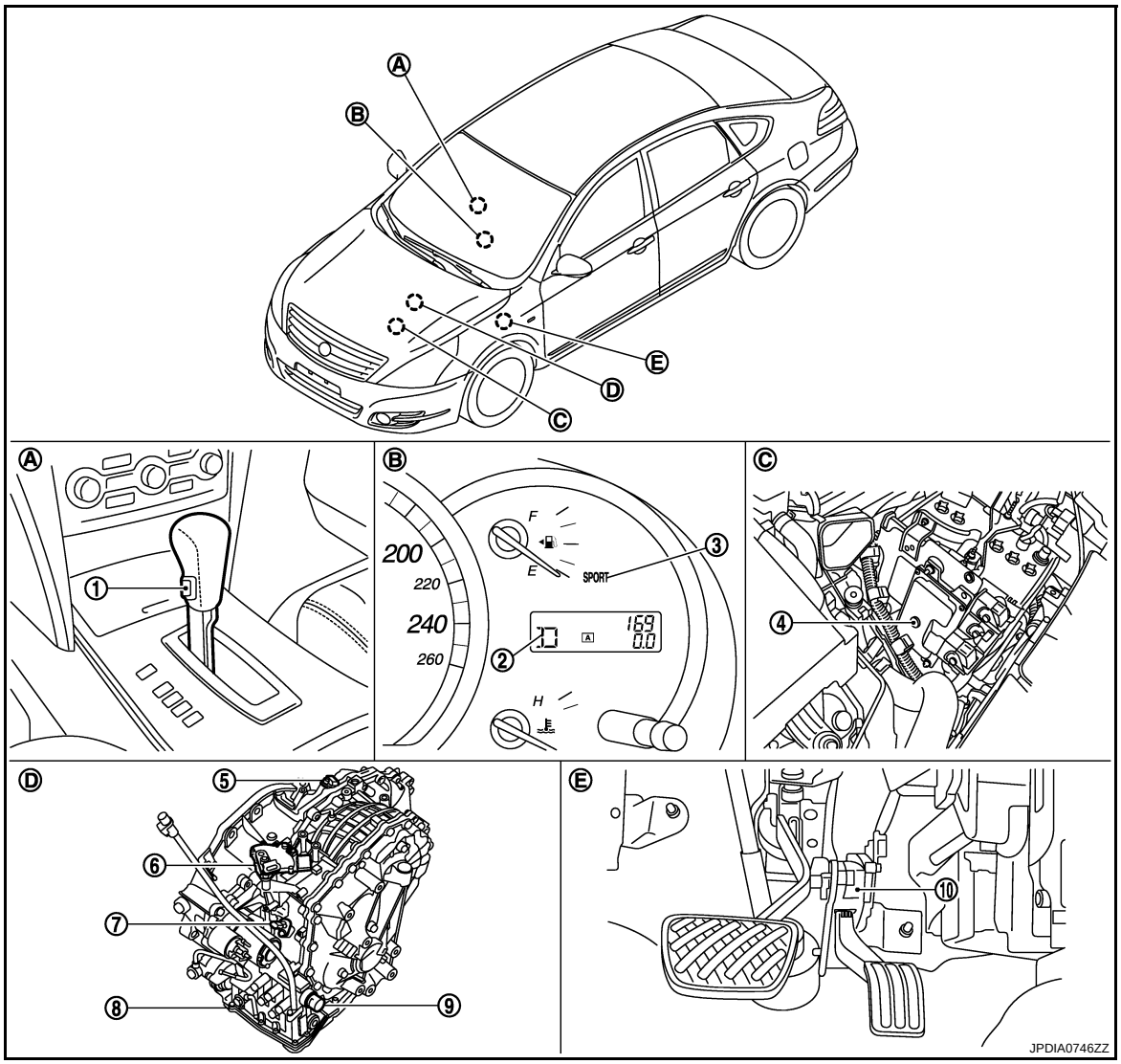

1.	Sport mode switch	2.	Shift position indicator	3.	SPORT indicator lamp
4.	TCM	5.	Secondary speed sensor	6.	PNP switch
7.	Primary speed sensor	8.	Control valve assembly*	9.	CVT unit connector
10.	Accelerator pedal position sensor				
A.	Center console	B.	Combination meter	C.	Engine room LH
D.	CVT assembly	E.	Accelerator pedal, upper		

*: Control valve assembly is included in CVT assembly.

NOTE:

The following components are included in control valve assembly (8).

- CVT fluid temperature sensor

- Torque converter clutch solenoid valve
- Line pressure solenoid valve
- Step motor
- ROM assembly
- Secondary pressure sensor
- Secondary pressure solenoid valve
- Lock-up select solenoid valve

Component Description

INFOID:0000000003806357

TRANSAXLE ASSEMBLY

Name	Function
Torque converter regulator valve	Optimizes the supply pressure for the torque converter depending on driving conditions.
Pressure regulator valve	Optimizes the discharge pressure from the oil pump depending on driving conditions.
TCC control valve	• Activates or deactivates the lock-up. • Locks-up smoothly by opening lock-up operation excessively.
Shift control valve	Controls inflow/outflow of line pressure from the primary pulley depending on the stroke difference between the stepping motor and the primary pulley.
Secondary valve	Controls the line pressure from the secondary pulley depending on operating conditions.
Clutch regulator valve	Adjusts the clutch operating pressure depending on operating conditions.
Manual valve	Transmits the clutch operating pressure to each circuit in accordance with the selected position.
Select control valve	Engages forward clutch, reverse brake smoothly depending on select operation.
Select switch valve	The select switch valve enables to select engagement/disengagement of lock-up clutch and that of forward clutch and reverse clutch.
TCC solenoid valve	TM-230
Secondary pressure solenoid valve	TM-240
Line pressure solenoid valve	TM-234
Step motor	TM-261
Lock-up select solenoid valve	TM-258
Primary speed sensor	TM-218
Secondary speed sensor	TM-222
PNP switch	TM-213
Primary pulley	TM-186
Secondary pulley	
Forward clutch	
Torque converter	

EXCEPT TRANSAXLE ASSEMBLY

Name	Function
TCM	Judges the vehicle driving status according to the signal from each sensor and controls the non-step transmission mechanism properly.
Accelerator pedal position sensor	TM-252

CONTROL SYSTEM

System Diagram

INFOID:0000000003806358

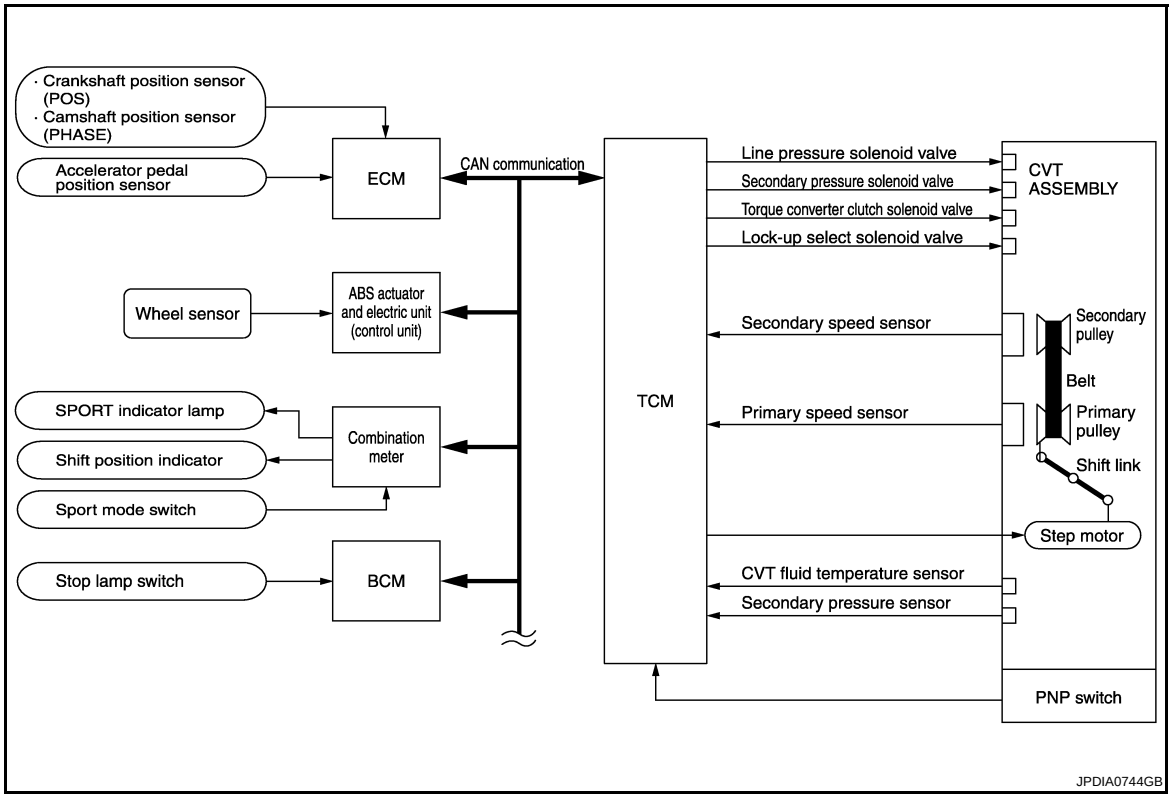

System Description

INFOID:0000000003806359

The CVT senses vehicle operating conditions through various sensors. It always controls the optimum shift position and reduces shifting and lock-up shocks.

TCM FUNCTION

The function of the TCM is to:

- Receive input signals sent from various switches and sensors.
- Determine required line pressure, shifting point, and lock-up operation.
- Send required output signals to the step motor and the respective solenoids.

SENSORS (or SIGNALS)		TCM		ACTUATORS
PNP switch Accelerator pedal position signal Closed throttle position signal Engine speed signal CVT fluid temperature sensor Vehicle speed signal Sport mode switch signal Stop lamp switch signal Primary speed sensor Secondary speed sensor Secondary pressure sensor	⇒	Shift control Line pressure control Primary pressure control Secondary pressure control Lock-up control Engine brake control Vehicle speed control Fail-safe control Self-diagnosis CONSULT-III communication line Duet-EA control CAN system On board diagnosis	⇒	Step motor Torque converter clutch solenoid valve Lock-up select solenoid valve Line pressure solenoid valve Secondary pressure solenoid valve SPORT indicator lamp Shift position indicator

INPUT/OUTPUT SIGNAL OF TCM

Control item		Fluid pressure control	Select control	Shift control	Lock-up control	CAN communication control	Fail-safe function(*3)
Input	PNP switch	X	X	X	X	X	X
	Accelerator pedal position signal *1	X	X	X	X	X	X
	Closed throttle position signal*1	X		X	X	X	
	Engine speed signal*1	X	X		X	X	X
	CVT fluid temperature sensor	X	X	X	X		X
	Sport mode switch signal*1	X		X	X	X	
	Stop lamp switch signal*1	X		X	X	X	
	Primary speed sensor	X		X	X	X	X
	Secondary speed sensor	X	X	X	X	X	X
	Secondary pressure sensor	X		X			X
Output	Step motor			X			X
	TCC solenoid valve		X		X		X
	Lock-up select solenoid valve		X		X		X
	Line pressure solenoid valve	X	X	X			X
	Secondary pressure solenoid valve	X		X			X
	SPORT indicator signal*2			X		X	

*1: Input via CAN communications.

*2: Output via CAN communications.

*3: If these input and output signals are different, the TCM triggers the fail-safe function.

Component Parts Location

INFOID:0000000003809653

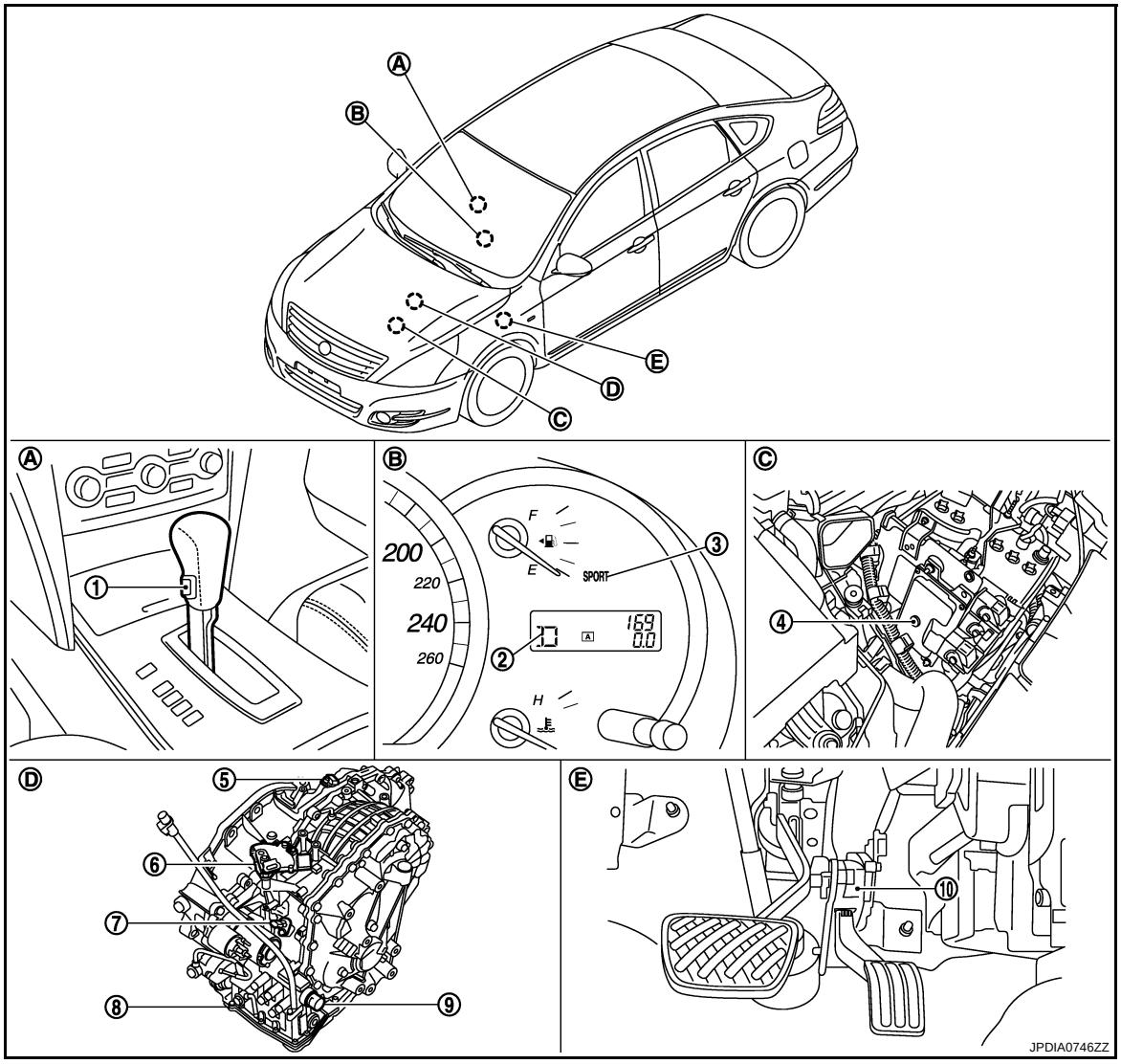

1.	Sport mode switch	2.	Shift position indicator	3.	SPORT indicator lamp
4.	TCM	5.	Secondary speed sensor	6.	PNP switch
7.	Primary speed sensor	8.	Control valve assembly*	9.	CVT unit connector
10.	Accelerator pedal position sensor				
A.	Center console	B.	Combination meter	C.	Engine room LH
D.	CVT assembly	E.	Accelerator pedal, upper		

*: Control valve assembly is included in CVT assembly.

NOTE:

The following components are included in control valve assembly (8).

- CVT fluid temperature sensor
- Torque converter clutch solenoid valve
- Line pressure solenoid valve
- Step motor
- ROM assembly
- Secondary pressure sensor
- Secondary pressure solenoid valve
- Lock-up select solenoid valve

Component Description

INFOID:0000000003806361

TRANSAXLE ASSEMBLY

Name	Function
PNP switch	TM-213
CVT fluid temperature sensor	TM-216
Primary speed sensor	TM-218
Secondary speed sensor	TM-222
Secondary pressure sensor	TM-242
Step motor	TM-261
TCC solenoid valve	TM-230
Lock-up select solenoid valve	TM-258
Line pressure solenoid valve	TM-234
Secondary pressure solenoid valve	TM-240

EXCEPT TRANSAXLE ASSEMBLY

Name	Function
TCM	Optimally controls continuously variable transmission system by judging driving conditions based on signals from each sensor.
Stop lamp switch	TM-210

LOCK-UP AND SELECT CONTROL SYSTEM

System Diagram

INFOID:0000000003806362

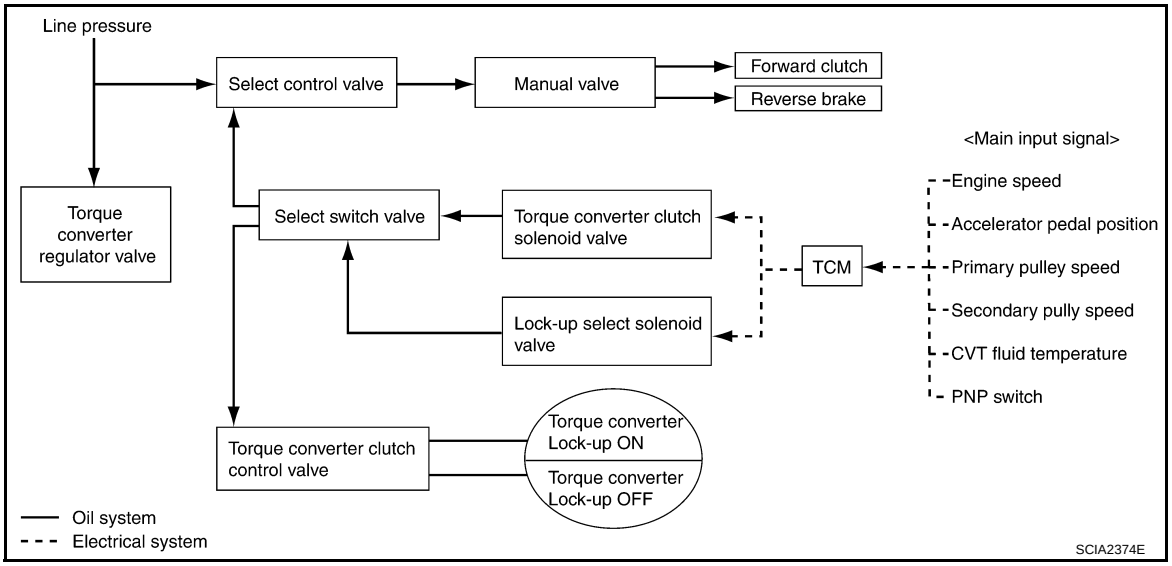

System Description

INFOID:0000000003806363

- The torque converter clutch piston in the torque converter is engaged to eliminate torque converter slip to increase power transmission efficiency.
- The torque converter clutch control valve operation is controlled by the torque converter clutch solenoid valve, which is controlled by a signal from TCM. The torque converter clutch control valve engages or releases the torque converter clutch piston.
- When shifting between “N” (“P”) ⇔“D” (“R”), torque converter clutch solenoid valve controls engagement power of forward clutch and reverse brake.
- The lock-up applied gear range was expanded by locking up the torque converter at a lower vehicle speed than conventional CVT models.

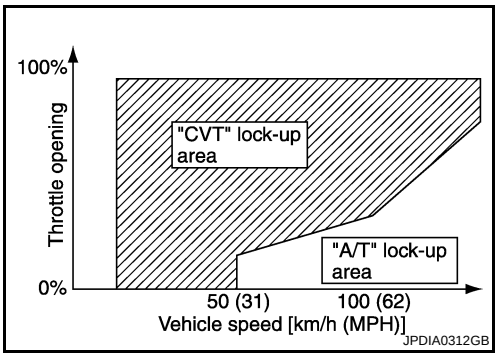

TORQUE CONVERTER CLUTCH AND SELECT CONTROL VALVE CONTROL

Lock-up Released

In the lock-up released state, the torque converter clutch control valve is set into the unlocked state by the torque converter clutch solenoid valve and the lock-up apply pressure is drained.
In this way, the torque converter clutch piston is not coupled.

Lock-up Applied

In the lock-up applied state, the torque converter clutch control valve is set into the locked state by the torque converter clutch solenoid valve and lock-up apply pressure is generated.
In this way, the torque converter clutch piston is pressed and coupled.

Select Control

When shifting between “N” (“P”) ⇔“D” (“R”), optimize the operating pressure on the basis of the throttle position, the engine speed, and the secondary pulley (output) revolution speed to lessen the shift shock.

Component Parts Location

INFOID:0000000003809654

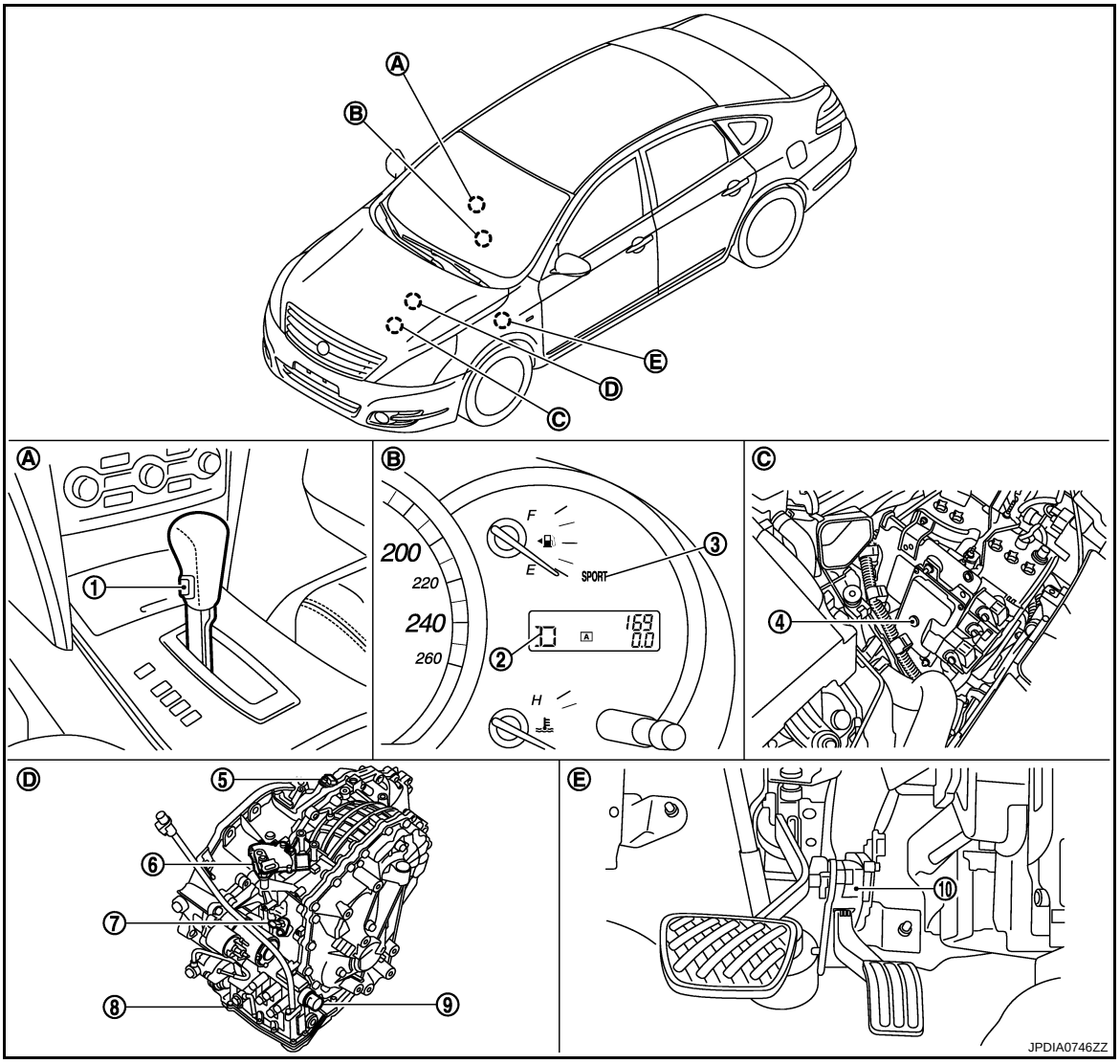

1.	Sport mode switch	2.	Shift position indicator	3.	SPORT indicator lamp
4.	TCM	5.	Secondary speed sensor	6.	PNP switch
7.	Primary speed sensor	8.	Control valve assembly*	9.	CVT unit connector
10.	Accelerator pedal position sensor				
A.	Center console	B.	Combination meter	C.	Engine room LH
D.	CVT assembly	E.	Accelerator pedal, upper		

*: Control valve assembly is included in CVT assembly.

NOTE:

The following components are included in control valve assembly (8).

- CVT fluid temperature sensor
- Torque converter clutch solenoid valve
- Line pressure solenoid valve
- Step motor
- ROM assembly
- Secondary pressure sensor
- Secondary pressure solenoid valve
- Lock-up select solenoid valve

Component Description

INFOID:0000000003806365

TRANSAXLE ASSEMBLY

Name	Function
Torque converter regulator valve	TM-189
TCC control valve	
Select control valve	
Select switch valve	
Manual valve	
TCC solenoid valve	TM-230
Lock-up select solenoid valve	TM-258
Primary speed sensor	TM-218
Secondary speed sensor	TM-222
CVT fluid temperature sensor	TM-216
PNP switch	TM-213
Forward clutch	TM-186
Reverse brake	
Torque converter	

EXCEPT TRANSAXLE ASSEMBLY

Name	Function
TCM	TM-193
Accelerator pedal position sensor	TM-252

SHIFT CONTROL SYSTEM

System Diagram

INFOID:0000000003806366

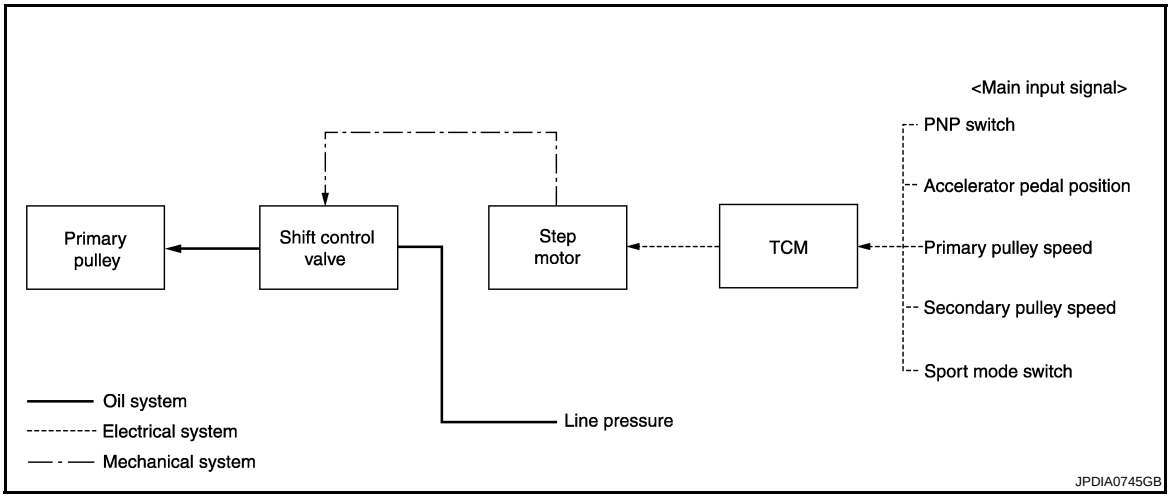

NOTE:
The gear ratio is set for each position separately.

System Description

INFOID:0000000003806367

In order to select the gear ratio that can obtain the driving force in accordance with driver's intention and the vehicle condition, TCM monitors the driving conditions, such as the vehicle speed and the throttle position and selects the optimum gear ratio, and determines the gear change steps to the gear ratio. Then TCM sends the command to the step motor, controls the inflow/outflow of line pressure from the primary pulley to determine the position of the moving-pulley and controls the gear ratio.

“D” POSITION

Shifting over all the ranges of gear ratios from the lowest to the highest.

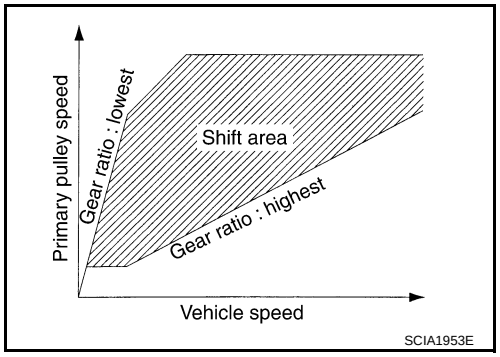

SPORT MODE

Use this position for the improved engine braking.

“L” POSITION

By limiting gear range to the lowest position, the strong driving force and the engine brake can be secured.

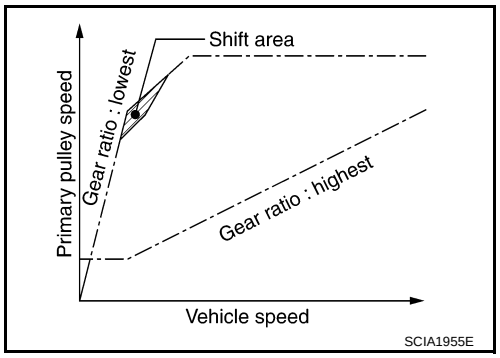

DOWNHILL ENGINE BRAKE CONTROL (AUTO ENGINE BRAKE CONTROL)

When a downhill slope is detected with the accelerator pedal released, the engine brake will be strengthened up by downshifting so as not to accelerate the vehicle more than necessary.

ACCELERATION CONTROL

According to vehicle speed and a change of accelerator pedal angle, driver's request for acceleration and driving scene are judged. This function assists improvement in the acceleration feeling by making the engine speed proportionate to the vehicle speed. And a shift map that can gain a larger driving force is available for compatibility of mileage with driveability.

Component Parts Location

INFOID:0000000003809655

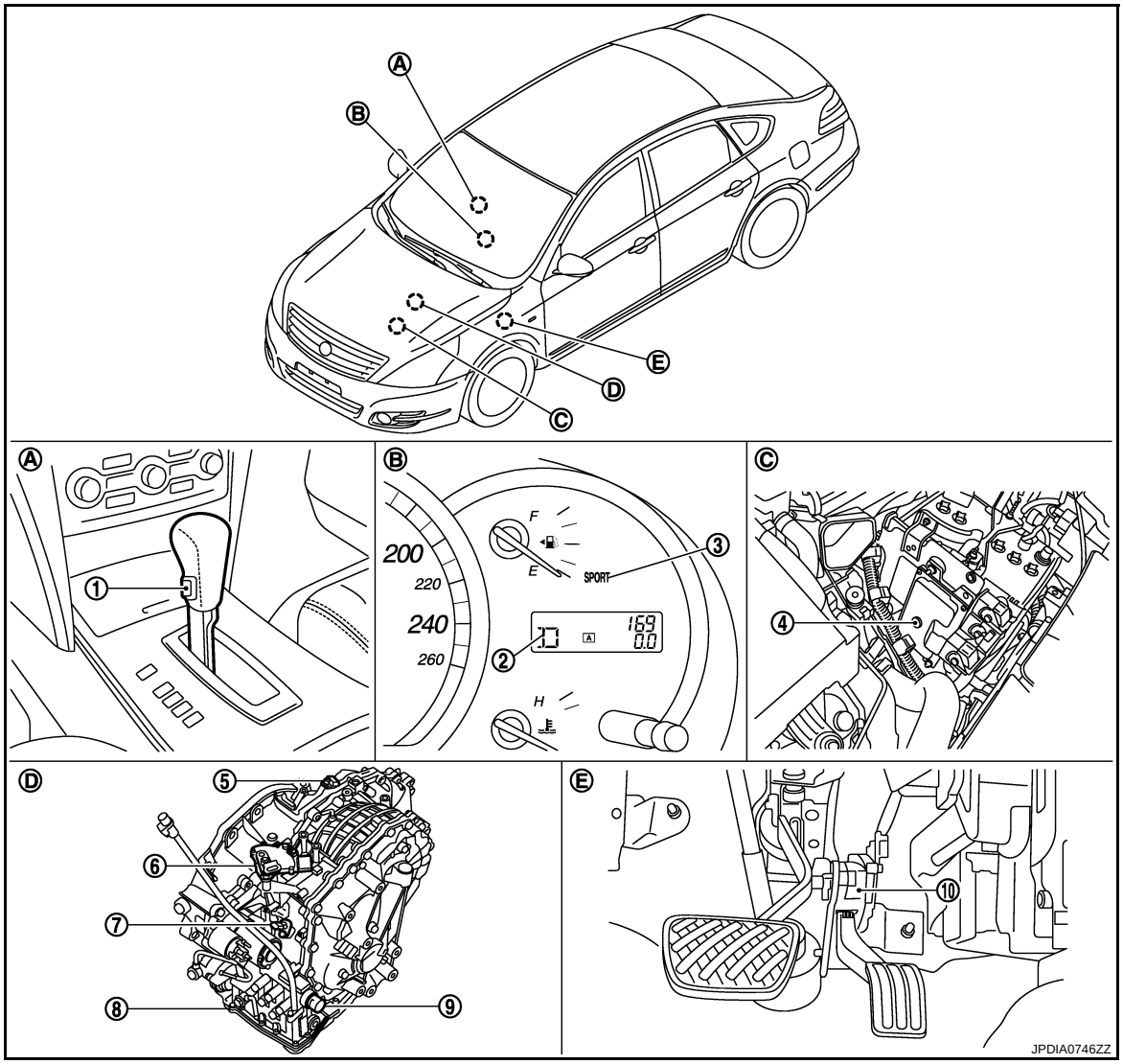

1.	Sport mode switch	2.	Shift position indicator	3.	SPORT indicator lamp
4.	TCM	5.	Secondary speed sensor	6.	PNP switch
7.	Primary speed sensor	8.	Control valve assembly*	9.	CVT unit connector
10.	Accelerator pedal position sensor				
A.	Center console	B.	Combination meter	C.	Engine room LH
D.	CVT assembly	E.	Accelerator pedal, upper		

*: Control valve assembly is included in CVT assembly.

NOTE:

The following components are included in control valve assembly (8).

- CVT fluid temperature sensor
- Torque converter clutch solenoid valve
- Line pressure solenoid valve
- Step motor
- ROM assembly

- Secondary pressure sensor
- Secondary pressure solenoid valve
- Lock-up select solenoid valve

Component Description

INFOID:0000000003806369

TRANSAXLE ASSEMBLY

Item	Function
PNP switch	TM-213
Primary speed sensor	TM-218
Secondary speed sensor	TM-222
Step motor	TM-261
Shift control valve	TM-189
Primary pulley	TM-186
Secondary pulley	TM-186

EXCEPT TRANSAXLE ASSEMBLY

Item	Function
TCM	TM-193

SHIFT LOCK SYSTEM

System Description

INFOID:0000000003806370

The shift lever it cannot be shifted from the “P” position unless the brake pedal is depressed while the ignition switch is set to ON. The shift lock is unlocked by turning the shift lock solenoid ON when the ignition switch is set to ON, the park switch is turned ON (selector lever is in “P” position), and the stop lamp switch is turned ON (brake pedal is depressed) as shown in the operation chart in the figure. Therefore, the shift lock solenoid receives no ON signal and the shift lock remains locked if all of the above conditions are not fulfilled. (However, selector operation is allowed if the shift lock release button is pressed.)

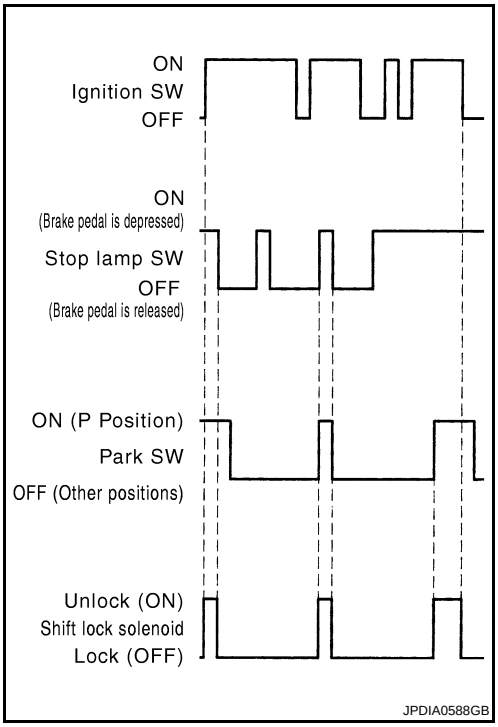

SHIFT LOCK OPERATION at “P” POSITION

When Brake Pedal Is Not Depressed (No Selector Operation Allowed)

The shift lock solenoid (A) is turned OFF (not energized) and the solenoid rod (B) is extended with the spring when the brake pedal is not depressed (no selector operation allowed) with the ignition switch ON.

The connecting lock lever (C) is located at the position shown in the figure when the solenoid rod is extended. It prevents the movement of the detent rod (D). The selector lever cannot be shifted from the P position for this reason.

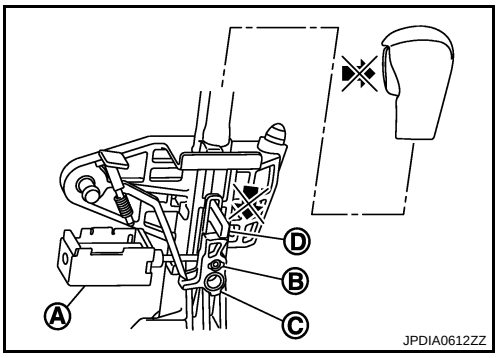

When Brake Pedal Is Depressed (Shift Operation Allowed)

The shift lock solenoid (A) is turned ON (energized) when the brake pedal is depressed with the ignition switch ON. The solenoid rod (B) is compressed by the electromagnetic force. The connecting lock lever (C) rotates when the solenoid rod is activated. Therefore, the detent rod (D) can be moved. The selector lever can be shifted to other positions for this reason.

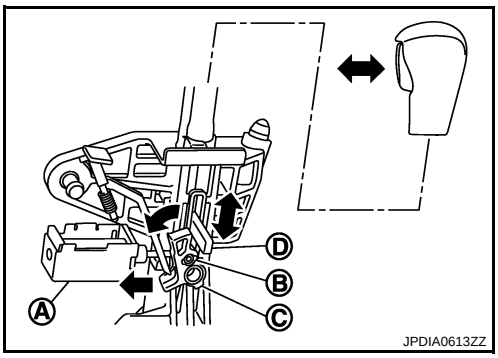

“P” POSITION HOLD MECHANISM (IGNITION SWITCH LOCK)

The shift lock solenoid (A) is not energized when the ignition switch is in any position other than ON. in this condition, the shift mechanism is locked and “P” position is held. The operation cannot be performed from “P” position if the brake pedal is depressed with the ignition switch ON when the operation system of shift lock solenoid is malfunctioning. However, the lock lever (B) is forcibly rotated and the shift lock is released when the shift lock release button (C) is pressed from above. Then the selector operation from “P” position can be performed.

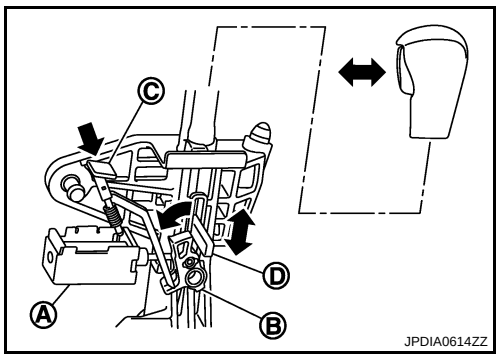

D : Detent rod

CAUTION:
Use the shift lock release button only when the selector lever cannot be operated even if the brake pedal is depressed with the ignition switch ON.

Component Parts Location

INFOID:0000000003806371

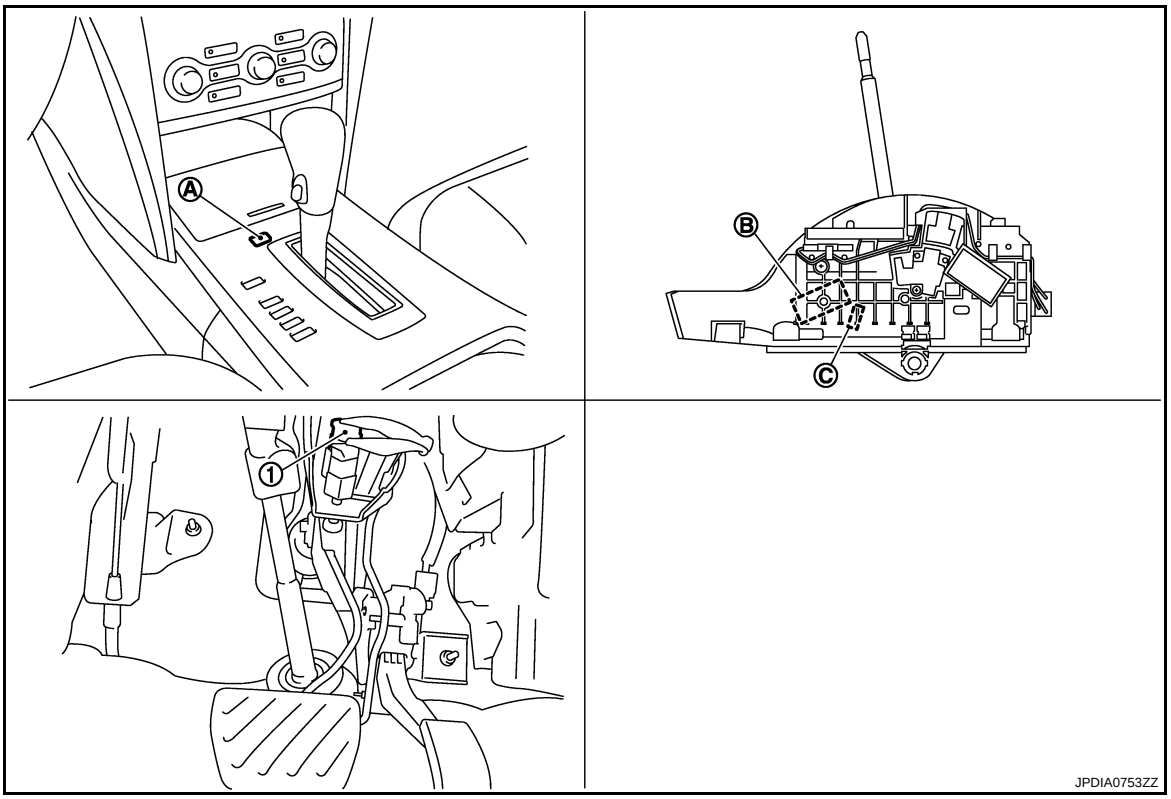

1. Stop lamp switch

A. Shift lock release button B. Shift lock solenoid C. Park position switch

Component Description

INFOID:0000000003806372

SHIFT LOCK

Component	Function
Shift lock solenoid	Refer to TM-267, "Description"
Lock lever	
Detent rod	
Park position switch	
Shift lock release button	

ON BOARD DIAGNOSTIC (OBD) SYSTEM

Diagnosis Description

INFOID:0000000003806373

DESCRIPTION

The CVT system has two self-diagnostic systems.
The first is the emission-related on board diagnostic system (OBD) performed by the TCM in combination with the ECM. A malfunction is indicated by the MI (Malfunction Indicator) and is stored as a DTC in the ECM memory and in the TCM memory.
The second is the TCM original self-diagnosis performed by the TCM. A malfunction history is stored in the TCM memory. The detected items are overlapped with OBD self-diagnostic items. For details, refer to TM-204, "CONSULT-III Function (TRANSMISSION)".

OBD FUNCTION

The ECM provides emission-related on board diagnostic (OBD) functions for the CVT system. One function is to receive a signal from the TCM used with OBD-related parts of the CVT system. The signal is sent to the ECM when a malfunction occurs in the corresponding OBD-related part. The other function is to indicate a diagnostic result by means of the MI (Malfunction Indicator) on the instrument panel. Sensors, switches and solenoid valves are used as sensing elements.
The MI automatically illuminates in “One or Two Trip Detection Logic” when a malfunction is sensed in relation to CVT system parts.

ONE OR TWO TRIP DETECTION LOGIC OF OBD

One Trip Detection Logic

If a malfunction is sensed during the first test drive, the MI illuminates and the ECM memory stores the malfunction as a DTC. The TCM is not provided with such a memory function.

Two Trip Detection Logic

When a malfunction is sensed during the first test drive, it is stored in the ECM memory as a 1st trip DTC (diagnostic trouble code) or 1st trip freeze frame data. At this point, the MI does not illuminate. — 1st trip
If the same malfunction as that experienced during the first test drive is sensed during the second test drive, the MI will illuminate. — 2nd trip
The “trip” in the “One or Two Trip Detection Logic” means a driving mode in which self-diagnosis is performed during vehicle operation.

OBD DIAGNOSTIC TROUBLE CODE (DTC)

How to Read DTC and 1st Trip DTC

DTC and 1st trip DTC can be read by the following methods.
(with CONSULT-III or GST GST) CONSULT-III or GST (Generic Scan Tool) Examples: P0705, P0720, etc.
These DTC are prescribed by ISO 15031-6.
(CONSULT-III also displays the malfunctioning component or system.)

- **1st trip DTC No. is the same as DTC No.**
- **Output of the diagnostic trouble code indicates that the indicated circuit has a malfunction. However, in case of the Mode II and GST, they do not indicate whether the malfunction is still occurring or it occurred in the past and has returned to normal.**
  CONSULT-III can identify them as shown below, therefore, CONSULT-III (if available) is recommended.

- DTC or 1st trip DTC of a malfunction is displayed in SELF-DIAGNOSTIC RESULTS mode for “ENGINE” with CONSULT-III. Time data indicates how many times the vehicle was driven after the last detection of a DTC.
- If the DTC is being detected currently, the time data will be “0”.
- If a 1st trip DTC is stored in the ECM, the time data will be “1t”.

Freeze Frame Data and 1st Trip Freeze Frame Data

- The ECM has a memory function, which stores the driving conditions such as fuel system status, calculated load value, engine coolant temperature, short-term fuel trim, long-term fuel trim, engine speed and vehicle speed at the moment the ECM detects a malfunction.
  Data that are stored in the ECM memory, along with the 1st trip DTC, are called 1st trip freeze frame data, and the data, stored together with the DTC data, are called freeze frame data and displayed on CONSULT-III or GST. The 1st trip freeze frame data can only be displayed on the CONSULT-III screen, not on the GST. For details, refer to EC-113, "CONSULT-III Function".

Only one set of freeze frame data (either 1st trip freeze frame data or freeze frame data) can be stored in the ECM. 1st trip freeze frame data is stored in the ECM memory along with the 1st trip DTC. There is no priority for 1st trip freeze frame data, and it is updated each time a different 1st trip DTC is detected. However, once freeze frame data (2nd trip detection/MI on) is stored in the ECM memory, 1st trip freeze frame data is no longer stored. Remember, only one set of freeze frame data can be stored in the ECM. The ECM has the following priorities to update the data.

Priority	Items	
1	Freeze frame data	Misfire — DTC: P0300 - P0304 Fuel Injection System Function — DTC: P0171, P0172
2		Except the above items (Includes CVT related items)
3	1st trip freeze frame data	

Both 1st trip freeze frame data and freeze frame data (along with the DTC) are cleared when the ECM memory is erased.

How to Erase DTC

- The diagnostic trouble code can be erased by CONSULT-III, GST or ECM DIAGNOSTIC TEST MODE as described below.
- **If the battery cable is disconnected, the diagnostic trouble code will be lost within 24 hours.**
- **When erasing the DTC, using CONSULT-III or GST is easier and quicker than switching the mode selector on the ECM.**
- The following emission-related diagnostic information is cleared from the ECM memory when erasing DTC related to OBD. For details, refer to EC-389, "DTC Index".
- **Diagnostic trouble codes (DTC)**
- **1st trip diagnostic trouble codes (1st trip DTC)**
- **Freeze frame data**
- **1st trip freeze frame data**
- **System readiness test (SRT) codes**
- **Test values**

How to Erase DTC (With CONSULT-III)

The emission related diagnostic information in the TCM and ECM can be erased by selecting “All Erase” in the “Description” of “FINAL CHECK” mode with CONSULT-III.

How to Erase DTC (With GST)

1. If the ignition switch stays ON after repair work, be sure to turn ignition switch OFF once. Wait at least 10 seconds and then turn it ON (engine stopped) again.
2. Select Mode 4 with GST (Generic Scan Tool). For details, refer to EC-122, "Diagnosis Tool Function".

MALFUNCTION INDICATOR (MI)

Description

The MI is located on the instrument panel.

1. The MI is turned ON when the ignition switch is turned ON without the engine running. This is a bulb check.
   - If the MI is not turned ON, refer to EC-346, "Component Function Check".
2. The MI is turned OFF when the engine is started. If the MI remains ON, the on board diagnostic system has detected an engine system malfunction.

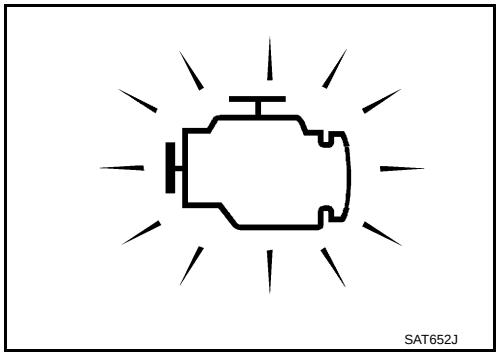

DIAGNOSIS SYSTEM (TCM)

CONSULT-III Function (TRANSMISSION)

INFOID:0000000003806374

FUNCTION

CONSULT-III can display each diagnostic item using the diagnostic test modes shown following.

Diagnostic test mode	Function
Work Support	This mode enables a technician to adjust some devices faster and more accurately.
Self Diagnostic Results	Retrieve DTC from ECU and display diagnostic items.
Data Monitor	Monitor the input/output signal of the control unit in real time.
CAN Diagnosis	This mode displays a network diagnosis result about CAN by a diagram.
CAN Diagnosis Support Monitor	It monitors the status of CAN communication.
ECU Identification	Display the ECU identification number (part number etc.) of the selected system.
Special Function	Other results or histories, etc. that are recorded in ECU are displayed.

WORK SUPPORT MODE

Display Item List

Item name	Description
ENGINE BRAKE ADJ.	The engine brake level setting can be canceled.
CONFORM CVTF DETERIORTN	The CVT fluid deterioration level can be checked.

Engine Brake Adjustment

“ENGINE BRAKE LEVEL”

0: Initial set value (Engine brake level control is activated)

OFF: Engine brake level control is deactivated.

CAUTION:

Mode of “+1”“0”“–1”“–2”“OFF” can be selected by touching “UP” or “DOWN” on CONSULT-III screen. However, do not select mode other than “0” and “OFF”. Selecting “+1” or “–1” or “–2” is selected, that may cause irregular driveability.

Check CVT Fluid Deterioration Date

“CVTF DETERIORATION DATE”

More than 210000:

It is necessary to change CVT fluid.

Less than 210000:

It is not necessary to change CVT fluid.

CAUTION:

Touch “CLEAR” after changing CVT fluid, and then erase “CVTF DETERIORATION DATE”.

SELF DIAGNOSTIC RESULT MODE

Display Items List

Refer to TM-284, "DTC Index".

DATA MONITOR MODE

Display Items List

X: Standard, —: Not applicable, ▼: Option

Monitored item (Unit)	Monitor item selection			Remarks
	ECU INPUT SIGNALS	MAIN SIGNALS	SELECTION FROM MENU	
VSP SENSOR (km/h)	X	—	▼	Output speed sensor (secondary speed sensor)
ESTM VSP SIG (km/h)	X	—	▼	—
PRI SPEED SEN (rpm)	X	—	▼	—
ENG SPEED SIG (rpm)	X	—	▼	—
SEC HYDR SEN (V)	X	—	▼	—
PRI HYDR SEN (V)	X	—	▼	—
ATF TEMP SEN (V)	X	—	▼	CVT fluid temperature sensor
VIGN SEN (V)	X	—	▼	—
VEHICLE SPEED (km/h)	—	X	▼	Vehicle speed recognized by the TCM.
PRI SPEED (rpm)	—	X	▼	Primary pulley speed
SEC SPEED (rpm)	—	—	▼	Secondary pulley speed
ENG SPEED (rpm)	—	X	▼	—
SLIP REV (rpm)	—	X	▼	Difference between engine speed and primary pulley speed.
GEAR RATIO	—	X	▼	—
G SPEED (G)	—	—	▼	—
ACC PEDAL OPEN (0.0/8)	X	X	▼	Degree of opening for accelerator recognized by the TCM. For fail-safe operation, the specific value used for control is displayed.
TRQ RTO	—	—	▼	—
SEC PRESS (MPa)	—	X	▼	—
PRI PRESS (MPa)	—	X	▼	Not mounted but displayed.
ATFTEMP COUNT	—	X	▼	Means CVT fluid temperature. Actual oil temperature °C (°F) numeric value is converted. Refer to TM-301
DSR REV (rpm)	—	—	▼	—
DGEAR RATIO	—	—	▼	—
DSTM STEP (step)	—	—	▼	—
STM STEP (step)	—	X	▼	—
LU PRS (MPa)	—	—	▼	—
LINE PRS (MPa)	—	—	▼	—
TGT SEC PRESS (MPa)	—	—	▼	—
ISOLT1 (A)	—	X	▼	Torque converter clutch solenoid valve output current
ISOLT2 (A)	—	X	▼	Pressure control solenoid valve A (line pressure solenoid valve) output current
ISOLT3 (A)	—	X	▼	Pressure control solenoid valve B (secondary pressure solenoid valve) output current

Monitored item (Unit)	Monitor item selection			Remarks
	ECU INPUT SIGNALS	MAIN SIGNALS	SELECTION FROM MENU	
SOLMON1 (A)	X	X	▼	Torque converter clutch solenoid valve monitor current
SOLMON2 (A)	X	X	▼	Pressure control solenoid valve A (line pressure solenoid valve) monitor current
SOLMON3 (A)	X	X	▼	Pressure control solenoid valve B (secondary pressure solenoid valve) monitor current
P POSITION SW (On/Off)	X	—	▼	—
R POSITION SW (On/Off)	X	—	▼	—
N POSITION SW (On/Off)	X	—	▼	—
D POSITION SW (On/Off)	X	—	▼	—
L POSITION SW (On/Off)	X	—	▼	—
BRAKE SW (On/Off)	X	X	▼	Stop lamp switch (Signal input via CAN communications)
FULL SW (On/Off)	X	X	▼	Signal input via CAN communications
IDLE SW (On/Off)	X	X	▼	
SPORT MODE SW (On/Off)	X	X	▼	
STRDWNSW (On/Off)	X	—	▼	Not mounted but displayed.
STRUPSW (On/Off)	X	—	▼	
DOWNLVR (On/Off)	X	—	▼	
UPLVR (On/Off)	X	—	▼	
NONMMODE (On/Off)	X	—	▼	
MMODE (On/Off)	X	—	▼	
INDLRNG (On/Off)	—	—	▼	“L” position indicator output
INDDRNG (On/Off)	—	—	▼	“D” position indicator output
INDNRNG (On/Off)	—	—	▼	“N” position indicator output
INDRRNG (On/Off)	—	—	▼	“R” position indicator output
INDPRNG (On/Off)	—	—	▼	“P” position indicator output
CVT LAMP (On/Off)	—	—	▼	—
SPORT MODE IND (On/Off)	—	—	▼	—
MMODE IND (On/Off)	—	—	▼	Not mounted but displayed.
SMCOIL D (On/Off)	—	—	▼	Step motor coil “D” energizing status
SMCOIL C (On/Off)	—	—	▼	Step motor coil “C” energizing status
SMCOIL B (On/Off)	—	—	▼	Step motor coil “B” energizing status
SMCOIL A (On/Off)	—	—	▼	Step motor coil “A” energizing status
LUSEL SOL OUT (On/Off)	—	—	▼	—
LUSEL SOL MON (On/Off)	—	—	▼	—
VDC ON (On/Off)	X	—	▼	—

Monitored item (Unit)	Monitor item selection			Remarks
	ECU INPUT SIGNALS	MAIN SIGNALS	SELECTION FROM MENU	
TCS ON (On/Off)	X	—	▼	—
ABS ON (On/Off)	X	—	▼	—
ACC ON (On/Off)	X	—	▼	Not mounted but displayed.
RANGE	—	X	▼	Indicates position is recognized by TCM. Indicates a specific value required for control when fail-safe function is activated.
M GEAR POS	—	X	▼	Not mounted but displayed.

Diagnostic Tool Function

INFOID:0000000003806375

OBD SELF-DIAGNOSTIC PROCEDURE

Refer to EC-122, "Diagnosis Tool Function".

COMPONENT DIAGNOSIS

U1000 CAN COMM CIRCUIT

Description

INFOID:0000000003806376

CAN (Controller Area Network) is a serial communication line for real time application. It is an on-vehicle multiplex communication line with high data communication speed and excellent malfunction detection ability. Many electronic control units are equipped onto a vehicle, and each control unit shares information and links with other control units during operation (not independent). In CAN communication, control units are connected with 2 communication lines (CAN-H and CAN-L) allowing a high rate of information transmission with less wiring. Each control unit transmits/receives data but selectively reads required data only.

DTC Logic

INFOID:0000000003806377

DTC DETECTION LOGIC

DTC	Item (CONSULT-III screen term)	Malfunction is detected when...	Possible cause
U1000	CAN COMM CIRCUIT	When TCM is not transmitting or receiving CAN communication signal for 2 seconds or more.	Harness or connectors (CAN communication line is open or shorted.)

DTC CONFIRMATION PROCEDURE

NOTE:

If “DTC CONFIRMATION PROCEDURE” has been previously performed, always turn ignition switch OFF. Then wait at least 10 seconds before performing the next test.

Perform the following procedure to confirm the malfunction is eliminated after the repair.

1. CHECK DTC DETECTION

With CONSULT-III

1. Turn ignition switch ON.
2. Start engine and wait for at least 6 seconds.
3. Select “Self Diagnostic Results” mode for “TRANSMISSION”.

With GST

Follow the procedure “With CONSULT-III”.

Is “U1000 CAN COMM CIRCUIT” detected?

YES >> Go to TM-208, "Diagnosis Procedure".
NO >> Check intermittent incident. Refer to GI-35, "Intermittent Incident".

Diagnosis Procedure

INFOID:0000000003806378

1. CHECK CAN COMMUNICATION CIRCUIT

With CONSULT-III

1. Turn ignition switch ON and start engine.
2. Select “Self Diagnostic Results” mode for “TRANSMISSION”.

Is “U1000 CAN COMM CIRCUIT” indicated?

YES >> Go to LAN section. Refer to LAN-22, "CAN System Specification Chart".
NO >> Check intermittent incident. Refer to GI-35, "Intermittent Incident".

U1010 CONTROL UNIT (CAN)

Description

INFOID:0000000003806379

CAN (Controller Area Network) is a serial communication line for real time application. It is an on-vehicle multiplex communication line with high data communication speed and excellent malfunction detection ability. Many electronic control units are equipped onto a vehicle, and each control unit shares information and links with other control units during operation (not independent). In CAN communication, control units are connected with 2 communication lines (CAN-H and CAN-L) allowing a high rate of information transmission with less wiring. Each control unit transmits/receives data but selectively reads required data only.

DTC Logic

INFOID:0000000003806380

DTC DETECTION LOGIC

DTC	Item (CONSULT-III screen term)	Malfunction is detected when...	Possible cause
U1010	CONTROL UNIT (CAN)	When detecting error during the initial diagnosis of CAN controller to TCM.	Harness or connectors (CAN communication line is open or shorted.)

DTC CONFIRMATION PROCEDURE

NOTE:
If “DTC CONFIRMATION PROCEDURE” has been previously performed, always turn ignition switch OFF. Then wait at least 10 seconds before performing the next test.
Perform the following procedure to confirm the malfunction is eliminated after the repair.

1. CHECK DTC DETECTION

With CONSULT-III
1. Turn ignition switch ON.
2. Start engine and wait for at least 6 seconds.
3. Select “Self Diagnostic Results” mode for “TRANSMISSION”.

Is “U1010 CONTROL UNIT (CAN)” detected?

YES >> Go to TM-209, "Diagnosis Procedure".
NO >> Check intermittent incident. Refer to GI-35, "Intermittent Incident".

Diagnosis Procedure

INFOID:0000000003806381

1. CHECK CAN COMMUNICATION CIRCUIT

With CONSULT-III
1. Turn ignition switch ON and start engine.
2. Select “Self Diagnostic Results” mode for “TRANSMISSION”.

Is “U1010 CONTROL UNIT (CAN)” indicated?

YES >> Replace the TCM. Refer to TM-315, "Exploded View".
NO >> Check intermittent incident. Refer to GI-35, "Intermittent Incident".

P0703 STOP LAMP SWITCH

Description

INFOID:0000000003806382

BCM detects ON/OFF state of the stop lamp switch and transmits the data to the CVT control unit via CAN communication by converting the data to a signal.

DTC Logic

INFOID:0000000003806383

DTC DETECTION LOGIC

DTC	Item (CONSULT-III screen term)	Malfunction is detected when...	Possible cause
P0703	BRAKE SW/CIRC	When the brake switch does not switch to ON or OFF.	• Harness or connectors - (Stop lamp switch, and BCM circuit are open or shorted.) - (CAN communication line is open or shorted.) • Stop lamp switch

DTC CONFIRMATION PROCEDURE

CAUTION:
Always drive vehicle at a safe speed.
NOTE:
If "DTC CONFIRMATION PROCEDURE" has been previously performed, always turn ignition switch OFF. Then wait at least 10 seconds before performing the next test.
Perform the following procedure to confirm the malfunction is eliminated after the repair.

1. CHECK DTC DETECTION

With CONSULT-III
1. Turn ignition switch ON.
2. Start engine.
3. Drive vehicle for at least 3 consecutive seconds.
4. Select "Self Diagnostic Results" mode for "TRANSMISSION".

Is "P0703 BRAKE SW/CIRC" detected?

YES >> Go to TM-210, "Diagnosis Procedure".
NO >> Check intermittent incident. Refer to GI-35, "Intermittent Incident".

Diagnosis Procedure

INFOID:0000000003806384

1. CHECK STOP LAMP SWITCH CIRCUIT

1. Check and adjust the installation position of stop lamp switch. Refer to BR-6, "Inspection and Adjustment".
2. Disconnect BCM connector.
3. Check voltage between BCM vehicle side harness connector terminal and ground.

BCM vehicle side harness connector		Ground	Condition	Voltage (Approx.)
Connector	Terminal			
M123	118		Depressed brake pedal	Battery voltage
			Released brake pedal	0 V

Is the inspection result normal?

YES >> GO TO 5.
NO >> GO TO 2.

2. CHECK HARNESS BETWEEN STOP LAMP SWITCH AND BCM (PART 1)

1. Disconnect stop lamp switch connector.
2. Check continuity between stop lamp switch vehicle side harness connector terminal and BCM vehicle side harness connector terminal.

Stop lamp switch vehicle side harness connector		BCM vehicle side harness connector		Continuity
Connector	Terminal	Connector	Terminal	
E115	2	M123	118	Existed

Is the inspection result normal?

YES >> GO TO 3.
NO >> Repair or replace damaged parts.

3. CHECK HARNESS BETWEEN STOP LAMP SWITCH AND BCM (PART 2)

Check continuity between BCM vehicle side harness connector terminal and ground.

BCM vehicle side harness connector		Ground	Continuity
Connector	Terminal		
M123	118		Not existed

Is the inspection result normal?

YES >> GO TO 4.
NO >> Repair or replace damaged parts.

4. CHECK STOP LAMP SWITCH

Check stop lamp switch. Refer to TM-211, "Component Inspection (Stop Lamp Switch)".

Is the inspection result normal?

YES >> Check the following.
- Harness for short or open between battery and stop lamp switch
- 10 A fuse (No. 7, located in the fuse and fusible link block)

NO >> Repair or replace damaged parts.

5. CHECK BCM

With CONSULT-III
1. Turn ignition switch OFF.
2. Connect BCM connector.
3. Turn ignition switch ON.
4. Select “BRAKE SW 1” in “Data Monitor” mode for “BCM” and verify the proper operation of ON/OFF. Refer to BCS-42, "Reference Value".

Is the inspection result normal?

YES >> GO TO 6.
NO >> Replace BCM. Refer to BCS-78, "Exploded View".

6. DETECT MALFUNCTIONING ITEMS

Check TCM connector pin terminals for damage or loose connection with harness connector.

Is the inspection result normal?

YES >> Replace TCM. Refer to TM-315, "Exploded View".
NO >> Repair or replace damaged parts.

Component Inspection (Stop Lamp Switch)

INFOID:0000000003806385

1. CHECK STOP LAMP SWITCH

Check continuity between stop lamp switch connector terminals.

Stop lamp switch connector			Condition	Continuity
Connector	Terminal			
E115	1	2	Depressed brake pedal	Existed
			Released brake pedal	Not existed

Is the inspection result normal?

YES >> INSPECTION END

NO >> Repair or replace the stop lamp switch. Refer to BR-17, "Exploded View".

P0705 PARK/NEUTRAL POSITION SWITCH

Description

INFOID:0000000003806386

The PNP switch detects the selector lever position and sends a signal to the TCM.

DTC Logic

INFOID:0000000003806387

DTC DETECTION LOGIC

DTC	Item (CONSULT-III screen term)	Malfunction is detected when...	Possible cause
P0705	PNP SW/CIRC	TCM does not receive the correct voltage signal (based on the gear position) from the switch.	• Harness or connectors (PNP switches circuit is open or shorted.) • PNP switch

DTC CONFIRMATION PROCEDURE

CAUTION:
Always drive vehicle at a safe speed.
NOTE:
If "DTC CONFIRMATION PROCEDURE" has been previously performed, always turn ignition switch OFF. Then wait at least 10 seconds before performing the next test.
Perform the following procedure to confirm the malfunction is eliminated after the repair.

1. CHECK DTC DETECTION

With CONSULT-III
1. Turn ignition switch ON.
2. Select "Data Monitor" mode for "TRANSMISSION".
3. Start engine.
4. Drive vehicle and maintain the following conditions for at least 2 consecutive seconds.

VEHICLE SPEED	**: More than 10 km/h (6 MPH)**
ENG SPEED	**: More than 450 rpm**
ACC PEDAL OPEN	**: More than 1.0/8**

With GST
Follow the procedure "With CONSULT-III".

Is "P0705 PNP SW/CIRC" detected?

YES >> Go to TM-213, "Diagnosis Procedure".
NO >> Check intermittent incident. Refer to GI-35, "Intermittent Incident".

Diagnosis Procedure

INFOID:0000000003806388

1. CHECK POWER SOURCE

1. Turn ignition switch OFF.
2. Disconnect PNP switch connector.
3. Turn ignition switch ON.
4. Check voltage between PNP switch vehicle side harness connector terminal and ground.

PNP switch vehicle side harness connector		Ground	Voltage (Approx.)
Connector	Terminal		Battery voltage
F57	3		

Is the inspection result normal?

YES >> GO TO 2.
NO >> Check the following. If NG, repair or replace damaged parts.
- Harness for short or open between ignition switch and PNP switch
- 10 A fuse (No. 4, located in the fuse block J/B)

- Ignition switch

2. CHECK HARNESS BETWEEN TCM AND PNP SWITCH (PART 1)

1. Turn ignition switch OFF.
2. Disconnect TCM connector.
3. Check continuity between TCM vehicle side harness connector terminals and PNP switch vehicle side harness connector terminals.

TCM vehicle side harness connector		PNP switch vehicle side harness connector		Continuity
Connector	Terminal	Connector	Terminal	
F23	1	F57	5	Existed
	2		6	
	3		7	
	4		8	
	11		4	

Is the inspection result normal?

YES >> GO TO 3.
NO >> Repair or replace damaged parts.

3. CHECK HARNESS BETWEEN TCM AND PNP SWITCH (PART 2)

Check continuity between TCM vehicle side harness connector terminals and ground.

TCM vehicle side harness connector			Continuity
Connector	Terminal		
F23	1	Ground	Not existed
	2		
	3		
	4		
	11		

Is the inspection result normal?

YES >> GO TO 4.
NO >> Repair or replace damaged parts.

4. CHECK PNP SWITCH

1. Remove control cable from manual lever. Refer to TM-319, "Exploded View".
2. Check PNP switch. Refer to TM-214, "Component Inspection (Park/Neutral Position Switch)".

Is the inspection result normal?

YES >> GO TO 5.
NO >> Repair or replace damaged parts.

5. DETECT MALFUNCTIONING ITEM

Check TCM connector pin terminals for damage or loose connection with harness connector.

Is the inspection result normal?

YES >> Replace TCM. Refer to TM-315, "Exploded View".
NO >> Repair or replace damaged parts.

Component Inspection (Park/Neutral Position Switch)

INFOID:0000000003806389

1. CHECK PNP SWITCH

Check continuity of PNP switch connector terminals.

PNP switch connector			Condition	Continuity
Connector	Terminal			
F57	1	2	Manual lever in “P” position	Existed* *Continuity should not exist in positions other than the specified positions.
	3	4		
	3	5	Manual lever in “R” position	
	1	2	Manual lever in “N” position	
	3	6		
	3	7	Manual lever in “D” position	
	3	8	Manual lever in “L” position	

Is the inspection result normal?

YES >> INSPECTION END
NO >> Replace CVT assembly. Refer to TM-332, "Exploded View".

P0710 CVT FLUID TEMPERATURE SENSOR

Description

INFOID:0000000003806390

The CVT fluid temperature sensor detects the CVT fluid temperature and sends the signal to the TCM.

DTC Logic

INFOID:0000000003806391

DTC DETECTION LOGIC

DTC	Item (CONSULT-III screen term)	Malfunction is detected when...	Possible cause
P0710	ATF TEMP SEN/CIRC	During running, the CVT fluid temperature sensor signal voltage is excessively high or low.	• Harness or connectors (Sensor circuit is open or shorted.) • CVT fluid temperature sensor

DTC CONFIRMATION PROCEDURE

CAUTION:
Always drive vehicle at a safe speed.
NOTE:
If "DTC CONFIRMATION PROCEDURE" has been previously performed, always turn ignition switch OFF. Then wait at least 10 seconds before performing the next test.
Perform the following procedure to confirm the malfunction is eliminated after the repair.

1. CHECK DTC DETECTION

With CONSULT-III
1. Turn ignition switch ON.
2. Select "Data Monitor" mode for "TRANSMISSION".
3. Start engine and maintain the following conditions for at least 10 minutes (total).

VEHICLE SPEED	**: 10 km/h (6 MPH) or more**
ENG SPEED	**: 450 rpm more than**
ACC PEDAL OPEN	**: More than 1.0/8**
RANGE	**: "D" position**

With GST
Follow the procedure "With CONSULT-III".

Is "P0710 ATF TEMP SEN/CIRC" detected?

YES >> Go to TM-216, "Diagnosis Procedure".
NO >> Check intermittent incident. Refer to GI-35, "Intermittent Incident".

Diagnosis Procedure

INFOID:0000000003806392

1. CHECK CVT FLUID TEMPERATURE SENSOR CIRCUIT

1. Turn ignition switch OFF.
2. Disconnect the TCM connector.
3. Check resistance between TCM vehicle side harness connector terminals.

TCM vehicle side harness connector			Condition	Resistance (Approx.)
Connector	Terminal			
F23	13	25	When CVT fluid temperature is 20°C (68°F)	6.5 kΩ
			When CVT fluid temperature is 80°C (176°F)	0.9 kΩ

Is the inspection result normal?

YES >> GO TO 5.
NO >> GO TO 2.

2. CHECK HARNESS BETWEEN TCM AND CVT UNIT (CVT FLUID TEMPERATURE SENSOR) (PART 1)

1. Disconnect CVT unit connector.
2. Check continuity between TCM vehicle side harness connector terminals and CVT unit vehicle side harness connector terminals.

TCM vehicle side harness connector		CVT unit vehicle side harness connector		Continuity
Connector	Terminal	Connector	Terminal	
F23	13	F24	17	Existed
	25		19	

Is the inspection result normal?

YES >> GO TO 3.
NO >> Repair or replace damaged parts.

3. CHECK HARNESS BETWEEN TCM AND CVT UNIT (CVT FLUID TEMPERATURE SENSOR) (PART 2)

Check continuity between TCM vehicle side harness connector terminals and ground.

TCM vehicle side harness connector		Ground	Continuity
Connector	Terminal		
F23	13		Not existed
	25		

Is the inspection result normal?

YES >> GO TO 4.
NO >> Repair or replace damaged parts.

4. CHECK CVT FLUID TEMPERATURE SENSOR

Check CVT fluid temperature sensor. Refer to TM-217, "Component Inspection (CVT Fluid Temperature Sensor)".

Is the inspection result normal?

YES >> GO TO 5.
NO >> Repair or replace damaged parts.

5. CHECK TCM

Check TCM connector pin terminals for damage or loose connection with harness connector.

Is the inspection result normal?

YES >> Replace the TCM. Refer to TM-315, "Exploded View".
NO >> Repair or replace damaged parts.

Component Inspection (CVT Fluid Temperature Sensor)

INFOID:0000000003806393

1. CHECK CVT FLUID TEMPERATURE SENSOR

Check resistance between CVT unit harness connector terminals.

CVT unit harness connector			Condition	Resistance (Approx.)
Connector	Terminal			
F24	17	19	When CVT fluid temperature is 20°C (68°F)	6.5 kΩ
			When CVT fluid temperature is 80°C (176°F)	0.9 kΩ

Is the inspection result normal?

YES >> INSPECTION END
NO >> Replace the transaxle assembly. Refer to TM-332, "Exploded View".

P0715 INPUT SPEED SENSOR (PRI SPEED SENSOR)

Description

INFOID:0000000003806394

The input speed sensor (primary speed sensor) detects the primary pulley revolution speed and sends the signal to the TCM.

DTC Logic

INFOID:0000000003806395

DTC DETECTION LOGIC

DTC	Item (CONSULT-III screen term)	Malfunction is detected when...	Possible cause
P0715	INPUT SPD SEN/CIRC	• Input speed sensor (primary speed sensor) signal is not input due to an open circuit. • An unexpected signal is input when vehicle is being driven.	• Harness or connectors (Sensor circuit is open or shorted.) • Input speed sensor (primary speed sensor)

DTC CONFIRMATION PROCEDURE

CAUTION:
Always drive vehicle at a safe speed.
NOTE:
If "DTC CONFIRMATION PROCEDURE" has been previously performed, always turn ignition switch OFF. Then wait at least 10 seconds before performing the next test.
Perform the following procedure to confirm the malfunction is eliminated after the repair.

1. CHECK DTC DETECTION

With CONSULT-III
1. Turn ignition switch ON.
2. Select "Data Monitor" mode for "TRANSMISSION".
3. Start engine and maintain the following conditions for at least 5 consecutive seconds.

VEHICLE SPEED	**: 10 km/h (6 MPH) or more**
ACC PEDAL OPEN	**: More than 1.0/8**
RANGE	**: "D" position**
ENG SPEED	**: 450 rpm or more**
Driving location	**: Driving the vehicle uphill (increased engine load) will help maintain the driving conditions required for this test.**

With GST
Follow the procedure "With CONSULT-III".

Is "P0715 INPUT SPD SEN/CIRC" detected?

YES >> Go to TM-218, "Diagnosis Procedure".
NO >> Check intermittent incident. Refer to GI-35, "Intermittent Incident".

Diagnosis Procedure

INFOID:0000000003806396

1. CHECK INPUT SPEED SENSOR (PRIMARY SPEED SENSOR)

With CONSULT-III
1. Start engine.
2. Check voltage between TCM connector terminals.

TCM connector			Voltage (Approx.)
Connector	Terminal		
	(+)	(–)	
F23	46	25	Battery voltage
	48		

3. If OK, check pulse when vehicle cruises.

TCM connector		Condition	Data (Approx.)
Connector	Terminal		
F23	33	When driving at 20 km/h (12 MPH) in “L” position, use the CONSULT-III pulse frequency measuring function.	950 Hz

Is the inspection result normal?

YES >> GO TO 12.
NO >> GO TO 2.

2. CHECK POWER AND SENSOR GROUND

1. Turn ignition switch OFF.
2. Disconnect input speed sensor (primary speed sensor) connector.
3. Turn ignition switch ON.
4. Check voltage between input speed sensor (primary speed sensor) vehicle side harness connector terminals.

Input speed sensor (primary speed sensor) vehicle side harness connector			Voltage (Approx.)
Connector	Terminal		
	(+)	(–)	
F55	3	1	Battery voltage

5. Check voltage between input speed sensor (primary speed sensor) vehicle side harness connector terminal and ground.

Input speed sensor (primary speed sensor) vehicle side harness connector		Ground	Voltage (Approx.)
Connector	Terminal		
F55	3		Battery voltage

Is the inspection result normal?

YES >> GO TO 3.
NO-1 (Battery voltage is not supplied between terminals 1 and 3, and between terminal 3 and ground)>>GO TO 6.
NO-2 (Battery voltage is not supplied between terminals 1 and 3 only)>>GO TO 8.

3. CHECK HARNESS BETWEEN TCM AND INPUT SPEED SENSOR (PRIMARY SPEED SENSOR) (SENSOR GROUND)

1. Turn ignition switch OFF.
2. Disconnect TCM connector and CVT unit connector.
3. Check continuity between TCM vehicle side harness connector terminal and ground.

TCM vehicle side harness connector		Ground	Continuity
Connector	Terminal		
F23	25		Not existed

Is the inspection result normal?

YES >> GO TO 4.
NO >> Repair or replace damaged parts.

4. CHECK HARNESS BETWEEN TCM AND INPUT SPEED SENSOR (PRIMARY SPEED SENSOR) (PART 1)

Check continuity between TCM vehicle side harness connector terminal and input speed sensor (primary speed sensor) vehicle side harness connector terminal.

TCM vehicle side harness connector		Input speed sensor (primary speed sensor) vehicle side harness connector		Continuity
Connector	Terminal	Connector	Terminal	
F23	33	F55	2	Existed

Is the inspection result normal?

YES >> GO TO 5.
NO >> Repair or replace damaged parts.

5. CHECK HARNESS BETWEEN TCM AND INPUT SPEED SENSOR (PRIMARY SPEED SENSOR) (PART 2)

Check continuity between TCM vehicle side harness connector terminal and ground.

TCM vehicle side harness connector		Ground	Continuity
Connector	Terminal		
F23	33		Not existed

Is the inspection result normal?

YES >> GO TO 10.
NO >> Repair or replace damaged parts.

6. CHECK HARNESS BETWEEN IPDM E/R AND INPUT SPEED SENSOR (PRIMARY SPEED SENSOR) (POWER) (PART 1)

1. Turn ignition switch OFF.
2. Disconnect IPDM E/R connector.
3. Check continuity between IPDM E/R vehicle side harness connector terminal and input speed sensor (primary speed sensor) vehicle side harness connector terminal.

IPDM E/R vehicle side harness connector		Input speed sensor (primary speed sensor) vehicle side harness connector		Continuity
Connector	Terminal	Connector	Terminal	
F12	58	F55	3	Existed

Is the inspection result normal?

YES >> GO TO 7.
NO >> Repair or replace damaged parts.

7. CHECK HARNESS BETWEEN IPDM E/R AND INPUT SPEED SENSOR (PRIMARY SPEED SENSOR) (POWER) (PART 2)

Check continuity between IPDM E/R vehicle side harness connector terminal and ground.

IPDM E/R vehicle side harness connector		Ground	Continuity
Connector	Terminal		
F12	58		Not existed

Is the inspection result normal?

YES >> Check the following.
- Harness for short or open between ignition switch and IPDM E/R
- 10 A fuse (No. 43, located in the IPDM E/R)
- Ignition switch

NO >> Repair or replace damaged parts.

8. CHECK HARNESS BETWEEN TCM AND INPUT SPEED SENSOR (PRIMARY SPEED SENSOR) (SENSOR GROUND) (PART 1)

1. Turn ignition switch OFF.
2. Disconnect TCM connector.
3. Check continuity between TCM vehicle side harness connector terminal and input speed sensor (primary speed sensor) vehicle side harness connector terminal.

TCM vehicle side harness connector		Input speed sensor (primary speed sensor) vehicle side harness connector		Continuity
Connector	Terminal	Connector	Terminal	
F23	25	F55	1	Existed

Is the inspection result normal?

YES >> GO TO 9.
NO >> Repair or replace damaged parts.

9. CHECK HARNESS BETWEEN TCM AND INPUT SPEED SENSOR (PRIMARY SPEED SENSOR) (SENSOR GROUND) (PART 2)

1. Disconnect CVT unit connector.
2. Check continuity between TCM vehicle side harness connector terminal and ground.

TCM vehicle side harness connector		Ground	Continuity
Connector	Terminal		
F23	25		Not existed

Is the inspection result normal?

YES >> GO TO 10.
NO >> Repair or replace damaged parts.

10. CHECK CVT UNIT CIRCUIT

Check continuity between CVT unit connector terminal and ground.

CVT unit connector		Ground	Continuity
Connector	Terminal		
F24	19		Not existed

Is the inspection result normal?

YES >> GO TO 11.
NO >> Repair or replace damaged parts.

11. CHECK TCM

1. Replace with the same type of TCM. Refer to TM-315, "Exploded View".
2. Connect each connector.
3. Perform “DTC CONFIRMATION PROCEDURE”. Refer to TM-218, "DTC Logic".

Is “P0715 INPUT SPD SEN/CIRC” detected?

YES >> Replace input speed sensor (primary speed sensor). Refer to TM-323, "Exploded View".
NO >> Replace TCM. Refer to TM-315, "Exploded View".

12. DETECT MALFUNCTIONING ITEMS

Check TCM connector pin terminals for damage or loose connection with harness connector.

Is the inspection result normal?

YES >> Replace TCM. Refer to TM-315, "Exploded View".
NO >> Repair or replace damaged parts.

P0720 VEHICLE SPEED SENSOR CVT (SECONDARY SPEED SENSOR)

Description

INFOID:0000000003806397

The vehicle speed sensor CVT [output speed sensor (secondary speed sensor)] detects the revolution of the CVT output shaft and emits a pulse signal. The pulse signal is transmitted to the TCM, which converts it into vehicle speed.

DTC Logic

INFOID:0000000003806398

DTC DETECTION LOGIC

DTC	Item (CONSULT-III screen term)	Malfunction is detected when...	Possible cause
P0720	VEH SPD SEN/CIR AT	• Signal from vehicle speed sensor CVT [output speed sensor (secondary speed sensor)] is not input due to open or short circuit. • Unexpected signal is input during running.	• Harness or connectors (Sensor circuit is open or shorted.) • Output speed sensor (secondary speed sensor)

DTC CONFIRMATION PROCEDURE

CAUTION:
Always drive vehicle at a safe speed.
NOTE:
If "DTC CONFIRMATION PROCEDURE" has been previously performed, always turn ignition switch OFF. Then wait at least 10 seconds before performing the next test.
Perform the following procedure to confirm the malfunction is eliminated after the repair.

1. CHECK DTC DETECTION

With CONSULT-III
1. Turn ignition switch ON.
2. Select "Data Monitor" mode for "TRANSMISSION".
3. Start engine and maintain the following conditions for at least 12 consecutive seconds.

ACC PEDAL OPEN	**: More than 1.0/8**
RANGE	**: "D" position**
Driving location	**: Driving the vehicle uphill (increased engine load) will help maintain the driving conditions required for this test.**

With GST
Follow the procedure "With CONSULT-III".

Is "P0720 VEH SPD SEN/CIR AT" detected?

YES >> Go to TM-222, "Diagnosis Procedure".
NO >> Check intermittent incident. Refer to GI-35, "Intermittent Incident".

Diagnosis Procedure

INFOID:0000000003806399

1. CHECK OUTPUT SPEED SENSOR (SECONDARY SPEED SENSOR)

With CONSULT-III
1. Start engine.
2. Check voltage between TCM connector terminals.

TCM connector			Voltage (Approx.)
Connector	Terminal		
	(+)	(–)	
F23	46	7	Battery voltage
	48		

3. If OK, check pulse when vehicle drive.

TCM connector		Condition	Data (Approx.)
Connector	Terminal		
F23	34	When driving at 20 km/h (12 MPH) in “D” position, use the CONSULT-III pulse frequency measuring function.	490 Hz

Is the inspection result normal?

YES >> GO TO 11.
NO >> GO TO 2.

2. CHECK POWER AND SENSOR GROUND

1. Turn ignition switch OFF.
2. Disconnect output speed sensor (secondary speed sensor) connector.
3. Turn ignition switch ON.
4. Check voltage between output speed sensor (secondary speed sensor) vehicle side harness connector terminals.

Output speed sensor (secondary speed sensor) vehicle side harness connector			Voltage (Approx.)
Connector	Terminal		
	(+)	(–)	
F19	3	1	Battery voltage

5. Check voltage between output speed sensor (secondary speed sensor) vehicle side harness connector terminal and ground.

Output speed sensor (secondary speed sensor) vehicle side harness connector		Ground	Voltage (Approx.)
Connector	Terminal		
F19	3		Battery voltage

Is the inspection result normal?

YES >> GO TO 3.
NO-1 (Battery voltage is not supplied between terminals 1 and 3, and between terminal 3 and ground)>>GO TO 6.
NO-2 (Battery voltage is not supplied between terminals 1 and 3 only)>>GO TO 8.

3. CHECK HARNESS BETWEEN TCM AND OUTPUT SPEED SENSOR (SECONDARY SPEED SENSOR) (SENSOR GROUND)

1. Turn ignition switch OFF.
2. Disconnect TCM connector.
3. Check continuity between TCM vehicle side harness connector terminal and ground.

TCM vehicle side harness connector		Ground	Continuity
Connector	Terminal		
F23	7		Not existed

Is the inspection result normal?

YES >> GO TO 4.
NO >> Repair or replace damaged parts.

4. CHECK HARNESS BETWEEN TCM AND OUTPUT SPEED SENSOR (SECONDARY SPEED SENSOR) (PART 1)

Check continuity between TCM vehicle side harness connector terminal and output speed sensor (secondary speed sensor) vehicle side harness connector terminal.

TCM vehicle side harness connector		Output speed sensor (secondary speed sensor) vehicle side harness connector		Continuity
Connector	Terminal	Connector	Terminal	
F23	34	F19	2	Existed

Is the inspection result normal?

YES >> GO TO 5.
NO >> Repair or replace damaged parts.

5. CHECK HARNESS BETWEEN TCM AND OUTPUT SPEED SENSOR (SECONDARY SPEED SENSOR) (PART 2)

Check continuity between TCM vehicle side harness connector terminal and ground.

TCM vehicle side harness connector		Ground	Continuity
Connector	Terminal		
F23	34		Not existed

Is the inspection result normal?

YES >> GO TO 10.
NO >> Repair or replace damaged parts.

6. CHECK HARNESS BETWEEN IPDM E/R AND OUTPUT SPEED SENSOR (SECONDARY SPEED SENSOR) (POWER) (PART 1)

1. Turn ignition switch OFF.
2. Disconnect IPDM E/R connector.
3. Check continuity between IPDM E/R vehicle side harness connector terminal and output speed sensor (secondary speed sensor) vehicle side harness connector terminal.

IPDM E/R vehicle side harness connector		Output speed sensor (secondary speed sensor) vehicle side harness connector		Continuity
Connector	Terminal	Connector	Terminal	
F12	58	F19	3	Existed

Is the inspection result normal?

YES >> GO TO 7.
NO >> Repair or replace damaged parts.

7. CHECK HARNESS BETWEEN IPDM E/R AND OUTPUT SPEED SENSOR (SECONDARY SPEED SENSOR) (POWER) (PART 2)

Check continuity between IPDM E/R vehicle side harness connector terminal and ground.

IPDM E/R vehicle side harness connector		Ground	Continuity
Connector	Terminal		
F12	58		Not existed

Is the inspection result normal?

YES >> Check the following.
- Harness for short or open between ignition switch and IPDM E/R
- 10 A fuse (No. 43, located in IPDM E/R)
- Ignition switch

NO >> Repair or replace damaged parts.

8. CHECK HARNESS BETWEEN TCM AND OUTPUT SPEED SENSOR (SECONDARY SPEED SENSOR) (SENSOR GROUND) (PART 1)

1. Turn ignition switch OFF.
2. Disconnect TCM connector.
3. Check continuity between TCM vehicle side harness connector terminal and output speed sensor (secondary speed sensor) vehicle side harness connector terminal.

TCM vehicle side harness connector		Output speed sensor (secondary speed sensor) vehicle side harness connector		Continuity
Connector	Terminal	Connector	Terminal	
F23	7	F19	1	Existed

Is the inspection result normal?

YES >> GO TO 9.
NO >> Repair or replace damaged parts.

9. CHECK HARNESS BETWEEN TCM AND OUTPUT SPEED SENSOR (SECONDARY SPEED SENSOR) (SENSOR GROUND) (PART 2)

Check continuity between TCM vehicle side harness connector terminal and ground.

TCM vehicle side harness connector		Ground	Continuity
Connector	Terminal		
F23	7		Not existed

Is the inspection result normal?

YES >> GO TO 10.
NO >> Repair or replace damaged parts.

10. CHECK TCM

1. Replace with the same type of TCM. Refer to TM-315, "Exploded View".
2. Connect each connector.
3. Perform “DTC CONFIRMATION PROCEDURE”. Refer to TM-222, "DTC Logic".

Is “P0720 VEH SPD SEN/CIR AT” detected?

YES >> Replace output speed sensor (secondary speed sensor). Refer to TM-324, "Exploded View".
NO >> Replace TCM. Refer to TM-315, "Exploded View".

11. DETECT MALFUNCTIONING ITEMS

Check TCM connector pin terminals for damage or loose connection with harness connector.

Is the inspection result normal?

YES >> Replace TCM. Refer to TM-315, "Exploded View".
NO >> Repair or replace damaged parts.

P0725 ENGINE SPEED SIGNAL

Description

INFOID:0000000003806400

The engine speed signal is transmitted from ECM to TCM via CAN communication line.

DTC Logic

INFOID:0000000003806401

DTC DETECTION LOGIC

DTC	Item (CONSULT-III screen term)	Malfunction is detected when...	Possible cause
P0725	ENGINE SPEED SIG	• TCM does not receive the CAN communication signal from the ECM. • Engine speed is too low while driving.	• Harness or connectors (The ECM to the TCM circuit is open or shorted.)

DTC CONFIRMATION PROCEDURE

CAUTION:
Always drive vehicle at a safe speed.
NOTE:
If "DTC CONFIRMATION PROCEDURE" has been previously performed, always turn ignition switch OFF. Then wait at least 10 seconds before performing the next test.
Perform the following procedure to confirm the malfunction is eliminated after the repair.

1. CHECK DTC DETECTION

With CONSULT-III
1. Turn ignition switch ON.
2. Select "Data Monitor" mode for "TRANSMISSION".
3. Start engine and maintain the following conditions for at least 10 consecutive seconds.

PRI SPEED SEN : More than 1000 rpm

Is "P0725 ENGINE SPEED SIG" detected?

YES >> Go to TM-226, "Diagnosis Procedure".
NO >> Check intermittent incident. Refer to GI-35, "Intermittent Incident".

Diagnosis Procedure

INFOID:0000000003806402

1. CHECK DTC WITH ECM

With CONSULT-III
1. Turn ignition switch ON.
2. Select "Self Diagnostic Results" mode for "ENGINE".

Is any DTC other than "P0725 ENGINE SPEED SIG" detected?

YES >> Check the DTC detected item. Refer to EC-113, "CONSULT-III Function".
NO >> GO TO 2.

2. CHECK DTC WITH TCM

With CONSULT-III
Select "Self Diagnostic Results" mode for "TRANSMISSION".

Is any DTC other than "P0725 ENGINE SPEED SIG" detected?

YES >> Check the DTC detected item. Refer to TM-204, "CONSULT-III Function (TRANSMISSION)".
NO >> GO TO 3.

3. CHECK INPUT SIGNALS

With CONSULT-III
1. Start engine.
2. Select "Data Monitor" mode for "TRANSMISSION".

3. Check for engine speed change corresponding to “ACC PEDAL OPEN” while monitoring “ENG SPEED SIG”.

Item name	Condition	Display value
ENG SPEED SIG	Engine running	Closely matches the tachometer reading.
ACC PEDAL OPEN	Released accelerator pedal – Fully depressed accelerator pedal	0.0/8 – 8.0/8

Is the inspection result normal?

YES >> GO TO 4.
NO >> Check ignition signal circuit. Refer to EC-341, "Description".

4. CHECK TCM

Check TCM input/output signals. Refer to TM-275, "Reference Value".

Is the inspection result normal?

YES >> Check intermittent incident. Refer to GI-35, "Intermittent Incident".
NO >> Replace the TCM. Refer to TM-315, "Exploded View".

P0730 BELT DAMAGE

Description

INFOID:0000000003806403

TCM selects the gear ratio using the engine load (throttle position), the primary pulley revolution speed, and the secondary pulley revolution speed as input signals. Then it changes the operating pressure of the primary pulley and the secondary pulley and changes the groove width of the pulley.

DTC Logic

INFOID:0000000003806404

DTC DETECTION LOGIC

DTC	Item (CONSULT-III screen term)	Malfunction is detected when...	Possible cause
P0730	BELT DAMG	Unexpected gear ratio is detected.	Transaxle assembly

DTC CONFIRMATION PROCEDURE

CAUTION:
Always drive vehicle at a safe speed.
NOTE:
If "DTC CONFIRMATION PROCEDURE" has been previously performed, always turn ignition switch OFF. Then wait at least 10 seconds before performing the next test.
Perform the following procedure to confirm the malfunction is eliminated after the repair.

1. CHECK DTC DETECTION

With CONSULT-III
1. Turn ignition switch ON.
2. Select "Data Monitor" mode for "TRANSMISSION".
3. Make sure that output voltage of CVT fluid temperature sensor is within the range specified below.

ATF TEMP SEN : 1.0 – 2.0 V

If it is out of range, drive the vehicle to decrease the voltage (warm up the fluid) or stop engine to increase the voltage (cool down the fluid)

4. Start engine and maintain the following conditions for at least 30 consecutive seconds.

Start test from 0 km/h (0 MPH)

Constant acceleration	**: Keep 30 sec or more**
VEHICLE SPEED	**: 10 km/h (6 MPH) or more**
ACC PEDAL OPEN	**: More than 1.0/8**
RANGE	**: "D" position**
ENG SPEED	**: 450 rpm or more**

Is "P0730 BELT DAMG" detected?

YES >> Go to TM-228, "Diagnosis Procedure".
NO >> Check intermittent incident. Refer to GI-35, "Intermittent Incident".

Diagnosis Procedure

INFOID:0000000003806405

1. CHECK DTC

With CONSULT-III
1. Turn ignition switch ON.
2. Select "Self Diagnostic Results" mode for "TRANSMISSION".

Are any DTC displayed?

YES - 1 (DTC for "P0730 BELT DAMG" is displayed)>>Replace the transaxle assembly. Refer to TM-332, "Exploded View".
YES - 2 (DTC except for "P0730 BELT DAMG" is displayed)>>Check the DTC detected item. Refer to TM-204, "CONSULT-III Function (TRANSMISSION)".

NO >> Check intermittent incident. Refer to GI-35, "Intermittent Incident".

P0740 TORQUE CONVERTER CLUTCH SOLENOID VALVE

Description

INFOID:0000000003806406

- The torque converter clutch solenoid valve is activated by the TCM in response to signals sent from the vehicle speed and accelerator pedal position sensors. Lock-up piston operation will then be controlled.
- Lock-up operation, however, is prohibited when CVT fluid temperature is too low.
- When the accelerator pedal is depressed (less than 2.0/8) in lock-up condition, the engine speed shall not change abruptly. If there is a big jump in engine speed, there is no lock-up.

DTC Logic

INFOID:0000000003806407

DTC DETECTION LOGIC

DTC	Item (CONSULT-III screen term)	Malfunction is detected when...	Possible cause
P0740	TCC SOLENOID/CIRC	Normal voltage is not applied to solenoid due to open or short circuit.	• Torque converter clutch solenoid valve • Harness or connectors (Solenoid circuit is open or shorted.)

DTC CONFIRMATION PROCEDURE

NOTE:
If "DTC CONFIRMATION PROCEDURE" has been previously performed, always turn ignition switch OFF. Then wait at least 10 seconds before performing the next test.
Perform the following procedure to confirm the malfunction is eliminated after the repair.

1. CHECK DTC DETECTION

With CONSULT-III
1. Turn ignition switch ON.
2. Wait at least 10 consecutive seconds.
3. Check "Self Diagnostic Results" mode for "TRANSMISSION".

With GST
Follow the procedure "With CONSULT-III".

Is "P0740 TCC SOLENOID/CIRC" detected?

YES >> Go to TM-230, "Diagnosis Procedure".
NO >> Check intermittent incident. Refer to GI-35, "Intermittent Incident".

Diagnosis Procedure

INFOID:0000000003806408

1. CHECK TORQUE CONVERTER CLUTCH SOLENOID VALVE CIRCUIT

1. Turn ignition switch OFF.
2. Disconnect TCM connector.
3. Check resistance between TCM vehicle side harness connector terminal and ground.

TCM vehicle side harness connector		Ground	Resistance (Approx.)
Connector	Terminal		
F23	38		3.0 – 9.0 Ω

Is the inspection result normal?

YES >> GO TO 5.
NO >> GO TO 2.

2. CHECK HARNESS BETWEEN TCM AND CVT UNIT (TORQUE CONVERTER CLUTCH SOLENOID VALVE) (PART 1)

1. Disconnect CVT unit connector.
2. Check continuity between TCM vehicle side harness connector terminal and CVT unit vehicle side harness connector terminal.

TCM vehicle side harness connector		CVT unit vehicle side harness connector		Continuity
Connector	Terminal	Connector	Terminal	
F23	38	F24	12	Existed

Is the inspection result normal?

YES >> GO TO 3.
NO >> Repair or replace damaged parts.

3. CHECK HARNESS BETWEEN TCM AND CVT UNIT (TORQUE CONVERTER CLUTCH SOLENOID VALVE) (PART 2)

Check continuity between TCM vehicle side harness connector terminal and ground.

TCM vehicle side harness connector		Ground	Continuity
Connector	Terminal		
F23	38		Not existed

Is the inspection result normal?

YES >> GO TO 4.
NO >> Repair or replace damaged parts.

4. CHECK TORQUE CONVERTER CLUTCH SOLENOID VALVE

Check torque converter clutch solenoid valve. Refer to TM-231, "Component Inspection (Torque Converter Clutch Solenoid Valve)".

Is the inspection result normal?

YES >> GO TO 5.
NO >> Repair or replace damaged parts.

5. DETECT MALFUNCTIONING ITEMS

Check TCM connector pin terminals for damage or loose connection with harness connector.

Is the inspection result normal?

YES >> Replace TCM. Refer to TM-315, "Exploded View".
NO >> Repair or replace damaged parts.

Component Inspection (Torque Converter Clutch Solenoid Valve)

INFOID:0000000003806409

1. TORQUE CONVERTER CLUTCH SOLENOID VALVE

Check resistance between CVT unit harness connector terminal and ground.

CVT unit harness connector		Ground	Resistance (Approx.)
Connector	Terminal		
F24	12		3.0 – 9.0 Ω

Is the inspection result normal?

YES >> INSPECTION END
NO >> Replace the transaxle assembly. Refer to TM-332, "Exploded View".

P0744 A/T TCC S/V FUNCTION (LOCK -UP)

Description

INFOID:0000000003806410

This malfunction is detected when the torque converter clutch does not lock-up as instructed by the TCM. This is not only caused by electrical malfunctions (circuits open or shorted), but also by mechanical malfunctions such as control valve sticking, improper solenoid valve operation, etc.

DTC Logic

INFOID:0000000003806411

DTC DETECTION LOGIC

DTC	Item (CONSULT-III screen term)	Malfunction is detected when...	Possible cause
P0744	A/T TCC S/V FNCTN	• CVT cannot perform lock-up even if electrical circuit is good. • TCM detects as irregular by comparing reference value with slip rotation. • There is a big difference between engine speed and primary speed sensor when TCM lock-up signal is on.	• Torque converter clutch solenoid valve • Hydraulic control circuit

DTC CONFIRMATION PROCEDURE

CAUTION:
Always drive vehicle at a safe speed.
NOTE:
If "DTC CONFIRMATION PROCEDURE" has been previously performed, always turn ignition switch OFF. Then wait at least 10 seconds before performing the next test.
Perform the following procedure to confirm the malfunction is eliminated after the repair.

1. CHECK DTC DETECTION

With CONSULT-III
1. Turn ignition switch ON.
2. Select "Data Monitor" mode for "TRANSMISSION".
3. Start engine and maintain the following condition for at least 30 seconds.

ACC PEDAL OPEN	**: More than 1.0/8**
RANGE	**: "D" position**
VEHICLE SPEED	**: Constant speed of more than 40 km/h (25 MPH)**

With GST
Follow the procedure "With CONSULT-III".

Is "P0744 A/T TCC S/V FNCTN" detected?

YES >> Go to TM-232, "Diagnosis Procedure".
NO >> Check intermittent incident. Refer to GI-35, "Intermittent Incident".

Diagnosis Procedure

INFOID:0000000003806412

1. CHECK LINE PRESSURE

Perform line pressure test. Refer to TM-308, "Inspection and Judgment".

Is the inspection result normal?

YES >> GO TO 2.
NO >> Repair or replace damaged parts. Refer to TM-308, "Inspection and Judgment".

2. CHECK TORQUE CONVERTER CLUTCH SOLENOID VALVE

1. Turn ignition switch OFF.
2. Disconnect CVT unit connector.

3. Check torque converter clutch solenoid valve. Refer to TM-233, "Component Inspection (Torque Converter Clutch Solenoid Valve)".

Is the inspection result normal?

YES >> GO TO 3.
NO >> Repair or replace damaged parts.

3. CHECK LOCK-UP SELECT SOLENOID VALVE

Check lock-up select solenoid valve. Refer to TM-233, "Component Inspection (Lock-up Select Solenoid Valve)".

Is the inspection result normal?

YES >> GO TO 4.
NO >> Repair or replace damaged parts.

4. CHECK OUTPUT SPEED SENSOR (SECONDARY SPEED SENSOR) SYSTEM

Check output speed sensor (secondary speed sensor) system. Refer to TM-222, "DTC Logic".

Is the inspection result normal?

YES >> GO TO 5.
NO >> Repair or replace damaged parts.

5. CHECK INPUT SPEED SENSOR (PRIMARY SPEED SENSOR) SYSTEM

Check input speed sensor (primary speed sensor) system. Refer to TM-218, "DTC Logic".

Is the inspection result normal?

YES >> GO TO 6.
NO >> Repair or replace damaged parts.

6. DETECT MALFUNCTIONING ITEMS

Check TCM connector pin terminals for damage or loose connection with harness connector.

Is the inspection result normal?

YES >> Replace TCM. Refer to TM-315, "Exploded View".
NO >> Repair or replace damaged parts.

Component Inspection (Torque Converter Clutch Solenoid Valve)

INFOID:0000000003806413

1. CHECK TORQUE CONVERTER CLUTCH SOLENOID VALVE

Check resistance between CVT unit connector terminal and ground.

CVT unit connector		Ground	Resistance (Approx.)
Connector	Terminal		
F24	12		3.0 – 9.0 Ω

Is the inspection result normal?

YES >> INSPECTION END
NO >> Replace transaxle assembly. Refer to TM-332, "Exploded View".

Component Inspection (Lock-up Select Solenoid Valve)

INFOID:0000000003806414

1. CHECK LOCK-UP SELECT SOLENOID VALVE

Check resistance between CVT unit connector terminal and ground.

CVT unit connector		Ground	Resistance (Approx.)
Connector	Terminal		
F24	13		17.0 – 38.0 Ω

Is the inspection result normal?

YES >> INSPECTION END
NO >> Replace transaxle assembly. Refer to TM-332, "Exploded View".

P0745 LINE PRESSURE SOLENOID VALVE

Description

INFOID:0000000003806415

The pressure control solenoid valve A (line pressure solenoid valve) regulates the oil pump discharge pressure to suit the driving condition in response to the signal transmitted from the TCM.

DTC Logic

INFOID:0000000003806416

DTC DETECTION LOGIC

DTC	Item (CONSULT-III screen term)	Malfunction is detected when...	Possible cause
P0745	L/PRESS SOL/CIRC	• Normal voltage is not applied to solenoid due to open or short circuit. • TCM detects as irregular by comparing target value with monitor value.	• Harness or connectors (Solenoid circuit is open or shorted.) • Pressure control solenoid valve A (line pressure solenoid valve)

DTC CONFIRMATION PROCEDURE

NOTE:
If "DTC CONFIRMATION PROCEDURE" has been previously performed, always turn ignition switch OFF. Then wait at least 10 seconds before performing the next test.
Perform the following procedure to confirm the malfunction is eliminated after the repair.

1. CHECK DTC DETECTION

With CONSULT-III
1. Turn ignition switch ON.
2. Start engine and wait at least 5 seconds.
3. Select "Self Diagnostic Results" mode for "TRANSMISSION".

With GST
Follow the procedure "With CONSULT-III".

Is "P0745 L/PRESS SOL/CIRC" detected?

YES >> Go to TM-234, "Diagnosis Procedure".
NO >> Check intermittent incident. Refer to GI-35, "Intermittent Incident".

Diagnosis Procedure

INFOID:0000000003806417

1. CHECK PRESSURE CONTROL SOLENOID VALVE A (LINE PRESSURE SOLENOID VALVE) CIRCUIT

1. Turn ignition switch OFF.
2. Disconnect TCM connector.
3. Check resistance between TCM vehicle side harness connector terminal and ground.

TCM vehicle side harness connector		Ground	Resistance (Approx.)
Connector	Terminal		
F23	40		3.0 – 9.0 Ω

Is the inspection result normal?

YES >> GO TO 5.
NO >> GO TO 2.

2. CHECK HARNESS BETWEEN TCM AND CVT UNIT [PRESSURE CONTROL SOLENOID VALVE A (LINE PRESSURE SOLENOID VALVE)] (PART 1)

1. Disconnect CVT unit connector.
2. Check continuity between TCM vehicle side harness connector terminal and CVT unit vehicle side harness connector terminal.

TCM vehicle side harness connector		CVT unit vehicle side harness connector		Continuity
Connector	Terminal	Connector	Terminal	
F23	40	F24	2	Existed

Is the inspection result normal?

YES >> GO TO 3.
NO >> Repair or replace damaged parts.

3. CHECK HARNESS BETWEEN TCM AND CVT UNIT [PRESSURE CONTROL SOLENOID VALVE A (LINE PRESSURE SOLENOID VALVE)] (PART 2)

Check continuity between TCM vehicle side harness connector terminal and ground.

TCM vehicle side harness connector		Ground	Continuity
Connector	Terminal		
F23	40		Not existed

Is the inspection result normal?

YES >> GO TO 4.
NO >> Repair or replace damaged parts.

4. CHECK PRESSURE CONTROL SOLENOID VALVE A (LINE PRESSURE SOLENOID VALVE)

Check pressure control solenoid valve A (line pressure solenoid valve). Refer to TM-235, "Component Inspection [Pressure Control Solenoid Valve A (Line Pressure Solenoid Valve)]"

Is the inspection result normal?

YES >> GO TO 5.
NO >> Repair or replace damaged parts.

5. DETECT MALFUNCTIONING ITEMS

Check TCM connector pin terminals for damage or loose connection with harness connector.

Is the inspection result normal?

YES >> Replace TCM. Refer to TM-315, "Exploded View".
NO >> Repair or replace damaged parts.

Component Inspection [Pressure Control Solenoid Valve A (Line Pressure Solenoid Valve)]

INFOID:0000000003806418

1. CHECK PRESSURE CONTROL SOLENOID VALVE A (LINE PRESSURE SOLENOID VALVE)

Check resistance between CVT unit harness connector terminal and ground.

CVT unit harness connector		Ground	Resistance (Approx.)
Connector	Terminal		
F24	2		3.0 – 9.0 Ω

Is the inspection result normal?

YES >> INSPECTION END
NO >> Replace the transaxle assembly. Refer to TM-332, "Exploded View".

P0746 PRESSURE CONTROL SOLENOID A PERFORMANCE (LINE PRESSURE SOLENOID VALVE)

Description

INFOID:0000000003806419

The pressure control solenoid valve A (line pressure solenoid valve) regulates the oil pump discharge pressure to suit the driving condition in response to the signal sent from the TCM.

DTC Logic

INFOID:0000000003806420

DTC DETECTION LOGIC

DTC	Item (CONSULT-III screen term)	Malfunction is detected when...	Possible cause
P0746	PRS CNT SOL/A FCTN	Unexpected gear ratio was detected in the low side due to excessively low line pressure.	• Line pressure control system • Output speed sensor (secondary speed sensor) • Input speed sensor (primary speed sensor)

DTC CONFIRMATION PROCEDURE

CAUTION:
Always drive vehicle at a safe speed.
NOTE:
If "DTC CONFIRMATION PROCEDURE" has been previously performed, always turn ignition switch OFF. Then wait at least 10 seconds before performing the next test.
Perform the following procedure to confirm the malfunction is eliminated after the repair.

1. CHECK DTC DETECTION

With CONSULT-III
1. Turn ignition switch ON.
2. Select "Data Monitor" mode for "TRANSMISSION".
3. Start engine and maintain the following conditions for at least 10 consecutive seconds. Test start from 0 km/h (0 MPH).

ATF TEMP SEN	**: 1.0 – 2.0 V**
ACC PEDAL OPEN	**: More than 1.0/8**
RANGE	**: "D" position**
VEHICLE SPEED	**: 10 km/h (6 MPH) More than**
Driving location	**: Driving the vehicle uphill (increased engine load) will help maintain the driving conditions required for this test.**

With GST
Follow the procedure "With CONSULT-III".

Is "P0746 PRS CNT SOL/A FCTN" detected?

YES >> Go to TM-236, "Diagnosis Procedure".
NO >> Check intermittent incident. Refer to GI-35, "Intermittent Incident".

Diagnosis Procedure

INFOID:0000000003806421

1. CHECK LINE PRESSURE

Perform line pressure test. Refer to TM-308, "Inspection and Judgment".

Is the inspection result normal?

YES >> GO TO 2.
NO >> Repair or replace damaged parts. Refer to TM-308, "Inspection and Judgment".

2. CHECK PRESSURE CONTROL SOLENOID VALVE A (LINE PRESSURE SOLENOID VALVE)

Check pressure control solenoid valve A (line pressure solenoid valve). Refer to TM-237, "Component Inspection [Pressure Control Solenoid Valve A (Line Pressure Solenoid Valve)]".

Is the inspection result normal?

YES >> GO TO 3.
NO >> Repair or replace damaged parts.

3. CHECK OUTPUT SPEED SENSOR (SECONDARY SPEED SENSOR) SYSTEM

Check output speed sensor (secondary speed sensor) system. Refer to TM-222, "DTC Logic".

Is the inspection result normal?

YES >> GO TO 4.
NO >> Repair or replace damaged parts.

4. CHECK INPUT SPEED SENSOR (PRIMARY SPEED SENSOR) SYSTEM

Check input speed sensor (primary speed sensor) system. Refer to TM-218, "DTC Logic".

Is the inspection result normal?

YES >> GO TO 5.
NO >> Repair or replace damaged parts.

5. DETECT MALFUNCTIONING ITEMS

Check TCM connector pin terminals for damage or loose connection with harness connector.

Is the inspection result normal?

YES >> Replace the TCM. Refer to TM-315, "Exploded View".
NO >> Repair or replace damaged parts.

Component Inspection [Pressure Control Solenoid Valve A (Line Pressure Solenoid Valve)]

INFOID:0000000003806422

1. CHECK PRESSURE CONTROL SOLENOID VALVE A (LINE PRESSURE SOLENOID VALVE)

Check resistance between CVT unit harness connector terminal and ground.

CVT unit harness connector		Ground	Resistance (Approx.)
Connector	Terminal		
F24	2		3.0 – 9.0 Ω

Is the inspection result normal?

YES >> INSPECTION END
NO >> Replace the transaxle assembly. Refer to TM-332, "Exploded View".

P0776 PRESSURE CONTROL SOLENOID B PERFORMANCE (SEC PRESSURE SOLENOID VALVE)

Description

INFOID:0000000003806423

The pressure control solenoid valve B (secondary pressure solenoid valve) regulates the secondary pressure to suit the driving condition in response to a signal sent from the TCM.

DTC Logic

INFOID:0000000003806424

DTC DETECTION LOGIC

DTC	Item (CONSULT-III screen term)	Malfunction is detected when...	Possible cause
P0776	PRS CNT SOL/B FCTN	Secondary pressure is too high or too low compared with the commanded value while driving.	• Harness or connectors (Solenoid circuit is open or shorted.) • Pressure control solenoid valve B (secondary pressure solenoid valve system) • Transmission fluid pressure sensor A (secondary pressure sensor) • Line pressure control system

DTC CONFIRMATION PROCEDURE

CAUTION:
Always drive vehicle at a safe speed.
NOTE:
If "DTC CONFIRMATION PROCEDURE" has been previously performed, always turn ignition switch OFF. Then wait at least 10 seconds before performing the next test.
Perform the following procedure to confirm the malfunction is eliminated after the repair.

1. CHECK DTC DETECTION

With CONSULT-III
1. Turn ignition switch ON.
2. Select "Data Monitor" mode for "TRANSMISSION".
3. Start engine and maintain the following conditions for at least 30 consecutive seconds.

ATF TEMP SEN	**: 1.0 – 2.0 V**
ACC PEDAL OPEN	**: More than 1.0/8**
RANGE	**: "D" position**
VEHICLE SPEED	**: 10 km/h (6 MPH) More than**
Driving location	**: Driving the vehicle uphill (increased engine load) will help maintain the driving conditions required for this test.**

With GST
Follow the procedure "With CONSULT-III".

Is "P0776 PRS CNT SOL/B FCTN" detected?

YES >> Go to TM-238, "Diagnosis Procedure".
NO >> Check intermittent incident. Refer to GI-35, "Intermittent Incident".

Diagnosis Procedure

INFOID:0000000003806425

1. CHECK LINE PRESSURE

Perform line pressure test. Refer to TM-308, "Inspection and Judgment".

Is the inspection result normal?

YES >> GO TO 2.
NO >> Repair or replace damaged parts. Refer to TM-308, "Inspection and Judgment".

2. CHECK PRESSURE CONTROL SOLENOID VALVE B (SECONDARY PRESSURE SOLENOID VALVE)

Check pressure control solenoid valve B (Secondary pressure solenoid valve). Refer to TM-239, "Component Inspection [Pressure Control Solenoid Valve B (Secondary Pressure Solenoid Valve)]".

Is the inspection result normal?

YES >> GO TO 3.
NO >> Repair or replace damaged parts.

3. CHECK PRESSURE CONTROL SOLENOID VALVE A (LINE PRESSURE SOLENOID VALVE)

Check pressure control solenoid valve A (Line pressure solenoid valve). Refer to TM-239, "Component Inspection [Pressure Control Solenoid Valve A (Line Pressure Solenoid Valve)]".

Is the inspection result normal?

YES >> GO TO 4.
NO >> Repair or replace damaged parts.

4. CHECK TRANSMISSION FLUID PRESSURE SENSOR A (SECONDARY PRESSURE SENSOR) SYSTEM

Check transmission fluid pressure sensor A (secondary pressure sensor) system. Refer to TM-242, "DTC Logic".

Is the inspection result normal?

YES >> GO TO 5.
NO >> Repair or replace damaged parts.

5. DETECT MALFUNCTIONING ITEMS

Check TCM connector pin terminals for damage or loose connection with harness connector.

Is the inspection result normal?

YES >> Replace the TCM. Refer to TM-315, "Exploded View".
NO >> Repair or replace damaged parts.

Component Inspection [Pressure Control Solenoid Valve A (Line Pressure Solenoid Valve)]

INFOID:0000000003806426

1. CHECK PRESSURE CONTROL SOLENOID VALVE A (LINE PRESSURE SOLENOID VALVE)

Check resistance between CVT unit harness connector terminal and ground.

CVT unit harness connector		Ground	Resistance (Approx.)
Connector	Terminal		
F24	2		3.0 – 9.0 Ω

Is the inspection result normal?

YES >> INSPECTION END
NO >> Replace the transaxle assembly. Refer to TM-332, "Exploded View".

Component Inspection [Pressure Control Solenoid Valve B (Secondary Pressure Solenoid Valve)]

INFOID:0000000003806427

1. CHECK PRESSURE CONTROL SOLENOID VALVE B (SECONDARY PRESSURE SOLENOID VALVE)

Check resistance between CVT unit harness connector terminal and ground.

CVT unit harness connector		Ground	Resistance (Approx.)
Connector	Terminal		
F24	3		3.0 – 9.0 Ω

Is the inspection result normal?

YES >> INSPECTION END
NO >> Replace the transaxle assembly. Refer to TM-332, "Exploded View".

P0778 PRESSURE CONTROL SOLENOID B ELECTRICAL (SEC PRESSURE SOLENOID VALVE)

Description

INFOID:0000000003806428

The pressure control solenoid valve B (secondary pressure solenoid valve) regulates the oil pump discharge pressure to suit the driving condition in response to the signal sent from the TCM.

DTC Logic

INFOID:0000000003806429

DTC DETECTION LOGIC

DTC	Item (CONSULT-III screen term)	Malfunction is detected when...	Possible cause
P0778	PRS CNT SOL/B CIRC	• Normal voltage is not applied to solenoid due to cut line, short, etc. • TCM detects as irregular by comparing target value with monitor value.	• Harness or connectors (Sensor circuit is open or shorted.) • Pressure control solenoid valve B (secondary pressure solenoid valve)

DTC CONFIRMATION PROCEDURE

NOTE:
If "DTC CONFIRMATION PROCEDURE" has been previously performed, always turn ignition switch OFF. Then wait at least 10 seconds before performing the next test.
Perform the following procedure to confirm the malfunction is eliminated after the repair.

1. CHECK DTC DETECTION

With CONSULT-III
1. Start engine.
2. Drive vehicle for at least 5 consecutive seconds.
3. Select "Self Diagnostic Results" mode for "TRANSMISSION".

With GST
Follow the procedure "With CONSULT-III".

Is "P0778 PRS CNT SOL/B CIRC" detected?

YES >> Go to TM-240, "Diagnosis Procedure".
NO >> Check intermittent incident. Refer to GI-35, "Intermittent Incident".

Diagnosis Procedure

INFOID:0000000003806430

1. CHECK PRESSURE CONTROL SOLENOID VALVE B (SECONDARY PRESSURE SOLENOID VALVE) CIRCUIT

1. Turn ignition switch OFF.
2. Disconnect TCM connector.
3. Check resistance between TCM vehicle side harness connector terminal and ground.

TCM vehicle side harness connector		Ground	Resistance (Approx.)
Connector	Terminal		
F23	39		3.0 – 9.0 Ω

Is the inspection result normal?

YES >> GO TO 5.
NO >> GO TO 2.

2. CHECK HARNESS BETWEEN TCM AND CVT UNIT [PRESSURE CONTROL SOLENOID VALVE B (SECONDARY PRESSURE SOLENOID VALVE)] (PART 1)

1. Disconnect CVT unit connector.

2. Check continuity between TCM vehicle side harness connector terminal and CVT unit vehicle side harness connector terminal.

TCM vehicle side harness connector		CVT unit vehicle side harness connector		Continuity
Connector	Terminal	Connector	Terminal	
F23	39	F24	3	Existed

Is the inspection result normal?

YES >> GO TO 3.
NO >> Repair or replace damaged parts.

3. CHECK HARNESS BETWEEN TCM AND CVT UNIT [PRESSURE CONTROL SOLENOID VALVE B (SECONDARY PRESSURE SOLENOID VALVE)] (PART 2)

Check continuity between TCM vehicle side harness connector terminal and ground.

TCM vehicle side harness connector		Ground	Continuity
Connector	Terminal		
F23	39		Not existed

Is the inspection result normal?

YES >> GO TO 4.
NO >> Repair or replace damaged parts.

4. CHECK PRESSURE CONTROL SOLENOID VALVE B (SECONDARY PRESSURE SOLENOID VALVE)

Check pressure control solenoid valve B (secondary pressure solenoid valve). Refer to TM-241, "Component Inspection [Pressure Control Solenoid Valve B (Secondary Pressure Solenoid Valve)]".

Is the inspection result normal?

YES >> GO TO 5.
NO >> Repair or replace damaged parts.

5. DETECT MALFUNCTIONING ITEMS

Check TCM connector pin terminals for damage or loose connection with harness connector.

Is the inspection result normal?

YES >> Replace TCM. Refer to TM-315, "Exploded View".
NO >> Repair or replace damaged parts.

Component Inspection [Pressure Control Solenoid Valve B (Secondary Pressure Solenoid Valve)]

INFOID:0000000003806431

1. CHECK PRESSURE CONTROL SOLENOID VALVE B (SECONDARY PRESSURE SOLENOID VALVE)

Check resistance between CVT unit harness connector terminal and ground.

CVT unit harness connector		Ground	Resistance (Approx.)
Connector	Terminal		
F24	3		3.0 – 9.0 Ω

Is the inspection result normal?

YES >> INSPECTION END
NO >> Replace the transaxle assembly. Refer to TM-332, "Exploded View".

P0840 TRANSMISSION FLUID PRESSURE SENSOR A (SEC PRESSURE SENSOR)

Description

INFOID:0000000003806436

The transmission fluid pressure sensor A (secondary pressure sensor) detects secondary pressure of CVT and sends the signal to the TCM.

DTC Logic

INFOID:0000000003806437

DTC DETECTION LOGIC

DTC	Item (CONSULT-III screen term)	Malfunction is detected when...	Possible cause
P0840	TR PRS SENS/A CIRC	Signal voltage of the transmission fluid pressure sensor A (secondary pressure sensor) is too high or too low while driving.	• Transmission fluid pressure sensor A (secondary pressure sensor) • Harness or connectors (Switch circuit is open or shorted.)

DTC CONFIRMATION PROCEDURE

NOTE:

If "DTC CONFIRMATION PROCEDURE" has been previously performed, always turn ignition switch OFF. Then wait at least 10 seconds before performing the next test.

Perform the following procedure to confirm the malfunction is eliminated after the repair.

1. CHECK DTC DETECTION

With CONSULT-III

1. Turn ignition switch ON.
2. Select "Data Monitor" mode for "TRANSMISSION".
3. Make sure that output voltage of line temperature sensor is within the range specified below.

ATF TEMP SEN : 1.0 – 2.0 V

If it is out of range, drive the vehicle to decrease the voltage (warm up the fluid) or stop engine to increase the voltage (cool down the fluid)

4. Start engine and wait for at least 5 consecutive seconds.

With GST

Follow the procedure "With CONSULT-III".

Is "P0840 TR PRS SENS/A CIRC" detected?

YES >> Go to TM-242, "Diagnosis Procedure".
NO >> Check intermittent incident. Refer to GI-35, "Intermittent Incident".

Diagnosis Procedure

INFOID:0000000003806438

1. CHECK INPUT SIGNAL

1. Start engine.
2. Check voltage between TCM connector terminal and ground.

TCM connector		Ground	Condition	Voltage (Approx.)
Connector	Terminal			
F23	15		"N" position idle	1.0 V

Is the inspection result normal?

YES >> GO TO 8.
NO >> GO TO 2.

2. CHECK POWER AND SENSOR GROUND

Check voltage between TCM connector terminals.

TCM connector			Voltage (Approx.)
Connector	Terminal		
	(+)	(–)	
F23	26	25	5.0 V

Is the inspection result normal?

YES >> GO TO 3.
NO >> GO TO 5.

3. CHECK HARNESS BETWEEN TCM AND CVT UNIT [TRANSMISSION FLUID PRESSURE SENSOR A (SECONDARY PRESSURE SENSOR)] (PART 1)

1. Turn ignition switch OFF.
2. Disconnect TCM connector and CVT unit connector.
3. Check continuity between TCM vehicle side harness connector terminal and CVT unit vehicle side harness connector terminal.

TCM vehicle side harness connector		CVT unit vehicle side harness connector		Continuity
Connector	Terminal	Connector	Terminal	
F23	15	F24	23	Existed

Is the inspection result normal?

YES >> GO TO 4.
NO >> Repair or replace damaged parts.

4. CHECK HARNESS BETWEEN TCM AND CVT UNIT [TRANSMISSION FLUID PRESSURE SENSOR A (SECONDARY PRESSURE SENSOR)] (PART 2)

Check continuity between TCM vehicle side harness connector terminal and ground.

TCM vehicle side harness connector		Ground	Continuity
Connector	Terminal		
F23	15		Not existed

Is the inspection result normal?

YES >> GO TO 7.
NO >> Repair or replace damaged parts.

5. CHECK HARNESS BETWEEN TCM AND CVT UNIT (SENSOR POWER AND SENSOR GROUND) (STEP 1)

1. Turn ignition switch OFF.
2. Disconnect TCM connector and CVT unit connector.
3. Check continuity between TCM vehicle side harness connector terminals and CVT unit vehicle side harness connector terminals.

TCM vehicle side harness connector		CVT unit vehicle side harness connector		Continuity
Connector	Terminal	Connector	Terminal	
F23	25	F24	19	Existed
	26		20	

Is the inspection result normal?

YES >> GO TO 6.
NO >> Repair or replace damaged parts.

6. CHECK HARNESS BETWEEN TCM AND CVT UNIT (SENSOR POWER AND SENSOR GROUND) (STEP 2)

Check continuity between TCM vehicle side harness connector terminals and ground.

TCM vehicle side harness connector		Ground	Continuity
Connector	Terminal		
F23	25		Not existed
	26		

Is the inspection result normal?

YES >> GO TO 7.
NO >> Repair or replace damaged parts.

7. CHECK TCM

1. Replace with the same type of TCM. Refer to TM-315, "Exploded View".
2. Connect each connector.
3. Perform “DTC CONFIRMATION PROCEDURE”. Refer to TM-242, "DTC Logic".

Is “P0840 TR PRS SENS/A CIRC” detected?

YES >> Replace transaxle assembly. Refer to TM-332, "Exploded View".
NO >> Replace TCM. Refer to TM-315, "Exploded View".

8. DETECT MALFUNCTIONING ITEMS

Check TCM connector pin terminals for damage or loose connection with harness connector.

Is the inspection result normal?

YES >> Replace TCM. Refer to TM-315, "Exploded View".
NO >> Repair or replace damaged parts.

P0841 PRESSURE SENSOR FUNCTION

Description

INFOID:0000000003806439

Using the engine load (throttle position), the primary pulley revolution speed, and the secondary pulley revolution speed as input signals, TCM changes the operating pressure of the primary pulley and the secondary pulley and changes the groove width of the pulley to control the gear ratio.

DTC Logic

INFOID:0000000003806440

DTC DETECTION LOGIC

DTC	Item (CONSULT-III screen term)	Malfunction is detected when...	Possible cause
P0841	PRESS SEN/FNCTN	Secondary pressure became higher than line pressure.	• Transmission fluid pressure sensor A (secondary pressure sensor) • Harness or connectors (Sensor circuit is open or shorted.)

DTC CONFIRMATION PROCEDURE

CAUTION:
Always drive vehicle at a safe speed.
NOTE:
If "DTC CONFIRMATION PROCEDURE" has been previously performed, always turn ignition switch OFF. Then wait at least 10 seconds before performing the next test.
Perform the following procedure to confirm the malfunction is eliminated after the repair.

1. CHECK DTC DETECTION

With CONSULT-III
1. Turn ignition switch ON.
2. Select "Data Monitor" mode for "TRANSMISSION".
3. Start engine and maintain the following conditions for at least 12 consecutive seconds.

VEHICLE SPEED	**: 40 km/h (25 MPH) More than**
RANGE	**: "D" position**

Is "P0841 PRESS SEN/FNCTN" detected?

YES >> Go to TM-245, "Diagnosis Procedure".
NO >> Check intermittent incident. Refer to GI-35, "Intermittent Incident".

Diagnosis Procedure

INFOID:0000000003806441

1. CHECK LINE PRESSURE

Perform line pressure test. Refer to TM-308, "Inspection and Judgment".

Is the inspection result normal?

YES >> GO TO 2.
NO >> Repair or replace damaged parts. Refer to TM-308, "Inspection and Judgment".

2. CHECK TRANSMISSION FLUID PRESSURE SENSOR A (SECONDARY PRESSURE SENSOR) SYSTEM

Check transmission fluid pressure sensor A (secondary pressure sensor) system. Refer to TM-242, "Description".

Is the inspection result normal?

YES >> GO TO 3.
NO >> Repair or replace damaged parts.

3. CHECK PRESSURE CONTROL SOLENOID VALVE A (LINE PRESSURE SOLENOID VALVE)

Check line pressure solenoid valve. Refer to TM-246, "Component Inspection [Pressure Control Solenoid Valve A (Line Pressure Solenoid Valve)]".

Is the inspection result normal?

YES >> GO TO 4.
NO >> Repair or replace damaged parts.

4. CHECK PRESSURE CONTROL SOLENOID VALVE B (SECONDARY PRESSURE SOLENOID VALVE)

Check secondary pressure solenoid valve. Refer to TM-246, "Component Inspection [Pressure Control Solenoid Valve B (Secondary Pressure Solenoid Valve)]".

Is the inspection result normal?

YES >> GO TO 5.
NO >> Repair or replace damaged parts.

5. CHECK STEP MOTOR SYSTEM

Check step motor system. Refer to TM-261, "Description".

Is the inspection result normal?

YES >> GO TO 6.
NO >> Repair or replace damaged parts.

6. DETECT MALFUNCTIONING ITEMS

Check TCM connector pin terminals for damage or loose connection with harness connector.

Is the inspection result normal?

YES >> Replace TCM. Refer to TM-315, "Exploded View".
NO >> Repair or replace damaged parts.

Component Inspection [Pressure Control Solenoid Valve A (Line Pressure Solenoid Valve)]

INFOID:0000000003806442

1. CHECK PRESSURE CONTROL SOLENOID VALVE A (LINE PRESSURE SOLENOID VALVE)

Check resistance between CVT unit harness connector terminal and ground.

CVT unit harness connector		Ground	Resistance (Approx.)
Connector	Terminal		
F24	2		3.0 – 9.0 Ω

Is the inspection result normal?

YES >> INSPECTION END
NO >> Replace the transaxle assembly. Refer to TM-332, "Exploded View".

Component Inspection [Pressure Control Solenoid Valve B (Secondary Pressure Solenoid Valve)]

INFOID:0000000003806443

1. CHECK PRESSURE CONTROL SOLENOID VALVE B (SECONDARY PRESSURE SOLENOID VALVE)

Check resistance between CVT unit harness connector terminal and ground.

CVT unit harness connector		Ground	Resistance (Approx.)
Connector	Terminal		
F24	3		3.0 – 9.0 Ω

Is the inspection result normal?

YES >> INSPECTION END
NO >> Replace the transaxle assembly. Refer to TM-332, "Exploded View".

P0868 SECONDARY PRESSURE DOWN

Description

INFOID:0000000003806444

The pressure control solenoid valve B (secondary pressure solenoid valve) regulates the secondary pressure to suit the driving condition in response to the signal sent from the TCM.

DTC Logic

INFOID:0000000003806445

DTC DETECTION LOGIC

DTC	Item (CONSULT-III screen term)	Malfunction is detected when...	Possible cause
P0868	SEC/PRESS DOWN	Secondary fluid pressure is too low compared with the commanded value while driving.	• Harness or connectors (Solenoid circuit is open or shorted.) • Pressure control solenoid valve B (secondary pressure solenoid valve) system • Transmission fluid pressure sensor A (secondary pressure sensor) • Line pressure control system

DTC CONFIRMATION PROCEDURE

CAUTION:
Always drive vehicle at a safe speed.
NOTE:
If "DTC CONFIRMATION PROCEDURE" has been previously performed, always turn ignition switch OFF. Then wait at least 10 seconds before performing the next test.
Perform the following procedure to confirm the malfunction is eliminated after the repair.

1. CHECK DTC DETECTION

With CONSULT-III

1. Turn ignition switch ON.
2. Select "Data Monitor" mode for "TRANSMISSION".
3. Make sure that output voltage of CVT fluid temperature sensor is within the range specified below.

ATF TEMP SEN	**: 1.0 – 2.0 V**

If it is out of range, drive the vehicle to decrease the voltage (warm up the fluid) or stop engine to increase the voltage (cool down the fluid)

4. Start engine and maintain the following conditions for at least 10 consecutive seconds.

VEHICLE SPEED (accelerate slowly)	**: 0 → 50 km/h (31 MPH)**
ACC PEDAL OPEN	**: 0.5/8 – 1.0/8**
RANGE	**: "D" position**

Is "P0868 SEC/PRESS DOWN" detected?

YES >> Go to TM-247, "Diagnosis Procedure".
NO >> Check intermittent incident. Refer to GI-35, "Intermittent Incident".

Diagnosis Procedure

INFOID:0000000003806446

1. CHECK LINE PRESSURE

Perform line pressure test. Refer to TM-308, "Inspection and Judgment".

Is the inspection result normal?

YES >> GO TO 2.
NO >> Repair or replace damaged parts. Refer to TM-308, "Inspection and Judgment".

2. CHECK PRESSURE CONTROL SOLENOID VALVE B (SECONDARY PRESSURE SOLENOID VALVE)

Check pressure control solenoid valve B (secondary pressure solenoid valve). Refer to TM-248, "Component Inspection [Pressure Control Solenoid Valve B (Secondary Pressure Solenoid Valve)]".

Is the inspection result normal?

YES >> GO TO 3.
NO >> Repair or replace damaged parts.

3. CHECK PRESSURE CONTROL SOLENOID VALVE A (LINE PRESSURE SOLENOID VALVE)

Check pressure control solenoid valve A (line pressure solenoid valve). Refer to TM-248, "Component Inspection [Pressure Control Solenoid Valve A (Line Pressure Solenoid Valve)]".

Is the inspection result normal?

YES >> GO TO 4.
NO >> Repair or replace damaged parts.

4. CHECK TRANSMISSION FLUID PRESSURE SENSOR A (SECONDARY PRESSURE SENSOR) SYSTEM

Check transmission fluid pressure sensor A (secondary pressure sensor) system. Refer to TM-242, "Description".

Is the inspection result normal?

YES >> GO TO 5.
NO >> Repair or replace damaged parts.

5. DETECT MALFUNCTIONING ITEMS

Check TCM connector pin terminals for damage or loose connection with harness connector.

Is the inspection result normal?

YES >> Replace TCM. Refer to TM-315, "Exploded View".
NO >> Repair or replace damaged parts.

Component Inspection [Pressure Control Solenoid Valve A (Line Pressure Solenoid Valve)]

INFOID:0000000003806447

1. CHECK PRESSURE CONTROL SOLENOID VALVE A (LINE PRESSURE SOLENOID VALVE)

Check resistance between CVT unit harness connector terminal and ground.

CVT unit harness connector		Ground	Resistance (Approx.)
Connector	Terminal		
F24	2		3.0 – 9.0 Ω

Is the inspection result normal?

YES >> INSPECTION END
NO >> Replace the transaxle assembly. Refer to TM-332, "Exploded View".

Component Inspection [Pressure Control Solenoid Valve B (Secondary Pressure Solenoid Valve)]

INFOID:0000000003806448

1. CHECK PRESSURE CONTROL SOLENOID VALVE B (SECONDARY PRESSURE SOLENOID VALVE)

Check resistance between CVT unit harness connector terminal and ground.

CVT unit harness connector		Ground	Resistance (Approx.)
Connector	Terminal		
F24	3		3.0 – 9.0 Ω

Is the inspection result normal?

YES >> INSPECTION END
NO >> Replace the transaxle assembly. Refer to TM-332, "Exploded View".

P1701 TRANSMISSION CONTROL MODULE (POWER SUPPLY)

Description

INFOID:0000000003806449

When the power supply to the TCM is cut off, for example because the battery is removed, and the self-diagnosis memory function stops, a malfunction is detected.

NOTE:

Since "P1701 TCM-POWER SUPPLY" will be indicated when replacing TCM, perform diagnosis after erasing "SELF-DIAG RESULTS".

DTC Logic

INFOID:0000000003806450

DTC DETECTION LOGIC

DTC	Item (CONSULT-III screen term)	Malfunction is detected when...	Possible cause
P1701	TCM-POWER SUPPLY	• When the power supply to the TCM is cut off, for example because the battery is removed, and the self-diagnosis memory function stops. • This is not a malfunction message (Whenever shutting off a power supply to the TCM, this message appears on the screen).	• Harness or connectors (Battery or ignition switch and TCM circuit is open or shorted.)

DTC CONFIRMATION PROCEDURE

NOTE:

If "DTC CONFIRMATION PROCEDURE" has been previously conducted, always turn ignition switch OFF. Then wait at least 10 seconds before conducting the next test.

Perform the following procedure to confirm the malfunction is eliminated after the repair.

1. CHECK DTC DETECTION

With CONSULT-III

1. Turn ignition switch ON.
2. Wait for at least 2 consecutive seconds.
3. Select "Self Diagnostic Results" mode for "TRANSMISSION".

Is "P1701 TCM-POWER SUPPLY" detected?

YES >> Go to TM-249, "Diagnosis Procedure".

NO >> Check intermittent incident. Refer to GI-35, "Intermittent Incident".

Diagnosis Procedure

INFOID:0000000003806451

1. CHECK TCM POWER SOURCE

1. Turn ignition switch OFF.
2. Disconnect TCM connector.
3. Check voltage between TCM vehicle side harness connector terminals.

TCM vehicle side harness connector			Condition	Voltage (Approx.)
Connector	Terminal			
	(+)	(–)		
F23	46	5, 42	Ignition switch ON	Battery voltage
			Ignition switch OFF	0 V
	48		Ignition switch ON	Battery voltage
			Ignition switch OFF	0 V
	45		Always	Battery voltage
	47			

Is the inspection result normal?

YES >> GO TO 6.
NO >> GO TO 2.

2. CHECK TCM GROUND CIRCUIT

1. Turn ignition switch OFF.
2. Check continuity between TCM vehicle side harness connector terminals and ground.

TCM vehicle side harness connector		Ground	Continuity
Connector	Terminal		
F23	5		Existed
	42		

Is the inspection result normal?

YES >> GO TO 3.
NO >> Repair or replace damaged parts.

3. CHECK TCM POWER CIRCUIT

Check voltage between TCM vehicle side harness connector terminals and ground.

TCM vehicle side harness connector		Ground	Condition	Voltage (Approx.)
Connector	Terminal			
F23	46		Ignition switch ON	Battery voltage
			Ignition switch OFF	0 V
	48		Ignition switch ON	Battery voltage
			Ignition switch OFF	0 V
	45		Always	Battery voltage
	47			

Is the inspection result normal?

YES >> GO TO 7.
NO >> GO TO 4.

4. CHECK HARNESS BETWEEN TCM AND IPDM E/R AND BETWEEN TCM AND BATTERY (PART 1)

1. Turn ignition switch OFF.
2. Disconnect IPDM E/R connector.
3. Check continuity between TCM vehicle side harness connector terminals and IPDM E/R vehicle side harness connector terminal.

TCM vehicle side harness connector		IPDM E/R vehicle side harness connector		Continuity
Connector	Terminal	Connector	Terminal	
F23	46	F12	58	Existed
	48			

4. Disconnect fuse block J/B connector.
5. Check continuity between TCM vehicle side harness connector terminals and fuse block J/B vehicle side harness connector terminal.

TCM vehicle side harness connector		Fuse block J/B vehicle side harness connector		Continuity
Connector	Terminal	Connector	Terminal	
F23	45	E103	12F	Existed
	47			

Is the inspection result normal?

YES >> GO TO 5.
NO >> Repair or replace damaged parts.

5. CHECK HARNESS BETWEEN TCM AND IPDM E/R AND BETWEEN TCM AND BATTERY (PART 3)

1. Disconnect fuse block J/B connector.
2. Check continuity between TCM vehicle side harness connector terminals and fuse block J/B vehicle side harness connector terminal.

TCM vehicle side harness connector		Fuse block J/B vehicle side harness connector		Continuity
Connector	Terminal	Connector	Terminal	
F23	45	E103	12F	Existed
	46			

Is the inspection result normal?

YES >> GO TO 6.
NO >> Repair or replace damaged parts.

6. CHECK HARNESS BETWEEN TCM AND IPDM E/R AND BETWEEN TCM AND BATTERY (PART 3)

Check continuity between TCM vehicle side harness connector terminals and ground.

TCM vehicle side harness connector			Continuity
Connector	Terminal		
F23	45	Ground	Not existed
	46		
	47		
	48		

Is the inspection result normal?

YES >> Check the following. If NG, repair or replace damaged parts.
- 10 A fuse (No. 43, located in IPDM E/R)
- 10 A fuse (No. 11, located in fuse block J/B)
- Ignition switch. Refer to PG-10, "Wiring Diagram - BATTERY POWER SUPPLY -".

NO >> Repair or replace damaged parts.

7. DETECT MALFUNCTIONING ITEMS

Check TCM connector pin terminals for damage or loose connection with harness connector.

Is the inspection result normal?

YES >> Replace TCM. Refer to TM-315, "Exploded View".
NO >> Repair or replace damaged parts.

P1705 THROTTLE POSITION SENSOR

Description

INFOID:0000000003806452

The electric throttle control actuator consists of throttle control motor, accelerator pedal position sensor, throttle position sensor, etc. The actuator sends a signal to the ECM, and ECM sends the signal to TCM via CAN communication.

DTC Logic

INFOID:0000000003806453

DTC DETECTION LOGIC

DTC	Item (CONSULT-III screen term)	Malfunction is detected when...	Possible cause
P1705	TP SEN/CIRC A/T	TCM does not receive the proper accelerator pedal position signals (input by CAN communication) from ECM.	• ECM • Harness or connectors (CAN communication line is open or shorted.)

DTC CONFIRMATION PROCEDURE

NOTE:
If "DTC CONFIRMATION PROCEDURE" has been previously performed, always turn ignition switch OFF.Then wait at least 10 seconds before performing the next test.
Perform the following procedure to confirm the malfunction is eliminated after the repair.

1. CHECK DTC DETECTION

With CONSULT-III
1. Turn ignition switch ON.
2. Depress accelerator pedal fully and release it, then wait for 5 seconds.
3. Select "Self Diagnostic Results" mode for "TRANSMISSION".

Is "P1705 TP SEN/CIRC A/T" detected?

YES >> Go to TM-252, "Diagnosis Procedure".
NO >> Check intermittent incident. Refer to GI-35, "Intermittent Incident".

Diagnosis Procedure

INFOID:0000000003806454

1. CHECK DTC WITH ECM

With CONSULT-III
1. Turn ignition switch ON.
2. Select "Self Diagnostic Results" mode for "ENGINE".

Is the inspection result normal?

YES >> GO TO 2.
NO >> Check the DTC Detected Item. Refer to EC-113, "CONSULT-III Function".

2. CHECK DTC WITH TCM

With CONSULT-III
Select "Self Diagnostic Results" mode for "TRANSMISSION".

Is "P1705 TP SEN /CIRC A/T" detected?

YES >> Replace TCM. Refer to TM-315, "Exploded View".
NO >> GO TO 3.

3. DETECT MALFUNCTIONING ITEMS

Check TCM connector pin terminals for damage or loose connection with harness connector.

Is the inspection result normal?

YES >> Replace TCM. Refer to TM-315, "Exploded View".
NO >> Repair or replace damaged parts.

P1722 ESTM VEHICLE SPEED SIGNAL

Description

INFOID:0000000003806455

The vehicle speed signal is transmitted from ABS actuator and electric unit (control unit) to TCM via CAN communication line.

DTC Logic

INFOID:0000000003806456

DTC DETECTION LOGIC

DTC	Item (CONSULT-III screen term)	Malfunction is detected when...	Possible cause
P1722	ESTM VEH SPD SIG	• CAN communication with the ABS actuator and the electric unit (control unit) is malfunctioning. • There is a big difference between the vehicle speed signal from the ABS actuator and the electric unit (control unit), and the vehicle speed sensor signal.	• Harness or connectors (Sensor circuit is open or shorted.) • ABS actuator and electric unit (control unit)

DTC CONFIRMATION PROCEDURE

CAUTION:
Always drive vehicle at a safe speed.
NOTE:
If "DTC CONFIRMATION PROCEDURE" has been previously performed, always turn ignition switch OFF. Then wait at least 10 seconds before performing the next test.
Perform the following procedure to confirm the malfunction is eliminated after the repair.

1. CHECK DTC DETECTION

With CONSULT-III
1. Turn ignition switch ON.
2. Select "Data Monitor" mode for "TRANSMISSION".
3. Start engine and maintain the following conditions for at least 5 consecutive seconds.

ACC PEDAL OPEN	**: 1.0/8 or less**
VEHICLE SPEED	**: 30 km/h (19 MPH) or more**

Is "P1722 ESTM VEH SPD SIG" detected?

YES >> Go to TM-253, "Diagnosis Procedure".
NO >> Check intermittent incident. Refer to GI-35, "Intermittent Incident".

Diagnosis Procedure

INFOID:0000000003806457

1. CHECK DTC WITH ABS ACTUATOR AND ELECTRIC UNIT (CONTROL UNIT)

With CONSULT-III
1. Turn ignition switch ON.
2. Select "Self Diagnostic Results" mode for "ABS".

Is the inspection result normal?

YES >> GO TO 2.
NO >> Check DTC detected item. Refer to BRC-48, "DTC No. Index" (ABS), BRC-140, "DTC No. Index" (VDC/TCS/ABS).

2. CHECK DTC WITH TCM

With CONSULT-III
Select "Self Diagnostic Results" mode for "TRANSMISSION".

Is "P1722 ESTM VEH SPD SIG" detected?

YES >> Replace TCM. Refer to TM-315, "Exploded View".
NO >> GO TO 3.

3. DETECT MALFUNCTIONING ITEMS

Check TCM connector pin terminals for damage or loose connection with harness connector.

Is the inspection result normal?

YES >> Replace TCM. Refer to TM-315, "Exploded View".
NO >> Repair or replace damaged parts.

P1723 CVT SPEED SENSOR FUNCTION

Description

INFOID:0000000003806458

The vehicle speed sensor CVT [output speed sensor (secondary speed sensor)] detects the revolution of parking gear and generates a pulse signal. The pulse signal is sent to the TCM, which converts it into vehicle speed.
The input speed sensor (primary speed sensor) detects the primary pulley revolution speed and sends the signal to the TCM.

DTC Logic

INFOID:0000000003806459

DTC DETECTION LOGIC

DTC	Item (CONSULT-III screen term)	Malfunction is detected when...	Possible cause
P1723	CVT SPD SEN/FNCTN	A rotation sensor error is detected when the gear does not change in accordance with the position of the stepping motor. **CAUTION:** **One of the "P0720 VEH SPD SEN/CIR AT", the "P0715 INPUT SPD SEN/CIRC" or the "P0725 ENGINE SPEED SIG" is displayed with the DTC at the same time.**	• Harness or connectors (Sensor circuit is open or shorted.) • Output speed sensor (secondary speed sensor) • Input speed sensor (primary speed sensor) • Engine speed signal system

DTC CONFIRMATION PROCEDURE

CAUTION:
Always drive vehicle at a safe speed.
NOTE:
If "DTC CONFIRMATION PROCEDURE" has been previously performed, always turn ignition switch OFF. Then wait at least 10 seconds before performing the next test.
Perform the following procedure to confirm the malfunction is eliminated after the repair.

1. CHECK DTC DETECTION

With CONSULT-III
1. Turn ignition switch ON.
2. Select "Data Monitor" mode for "TRANSMISSION".
3. Start engine and maintain the following conditions for at least 5 consecutive seconds.

VEHICLE SPEED	**: 10 km/h (6 MPH) or more**
ACC PEDAL OPEN	**: More than 1.0/8**
RANGE	**: "D" position**
ENG SPEED	**: 450 rpm or more**
Driving location	**: Driving the vehicle uphill (increased engine load) will help maintain the driving conditions required for this test.**

Is "P1723 CVT SPD SEN/FNCTN" detected?

YES >> Go to TM-255, "Diagnosis Procedure".
NO >> Check intermittent incident. Refer to GI-35, "Intermittent Incident".

Diagnosis Procedure

INFOID:0000000003806460

1. CHECK STEP MOTOR FUNCTION

With CONSULT-III
1. Turn ignition switch ON.
2. Select "Self Diagnostic Results" mode for "TRANSMISSION".

Is "P1778 STEP MOTR/FNC" detected?

YES >> Repair or replace damaged parts. Refer to TM-264, "DTC Logic".
NO >> GO TO 2.

2. CHECK OUTPUT SPEED SENSOR (SECONDARY SPEED SENSOR) SYSTEM

Check output speed sensor (secondary speed sensor) system. Refer to TM-222, "DTC Logic".

Is the inspection result normal?

YES >> GO TO 3.
NO >> Repair or replace damaged parts.

3. CHECK INPUT SPEED SENSOR (PRIMARY SPEED SENSOR) SYSTEM

Check input speed sensor (primary speed sensor) system. Refer to TM-218, "DTC Logic".

Is the inspection result normal?

YES >> GO TO 4.
NO >> Repair or replace damaged parts.

4. CHECK ENGINE SPEED SIGNAL SYSTEM

Check engine speed signal system. Refer to TM-226, "DTC Logic".

Is the inspection result normal?

YES >> GO TO 5.
NO >> Repair or replace damaged parts.

5. DETECT MALFUNCTIONING ITEMS

Check TCM connector pin terminals for damage or loose connection with harness connector.

Is the inspection result normal?

YES >> Replace the TCM. Refer to TM-315, "Exploded View".
NO >> Repair or replace damaged parts.

P1726 ELECTRIC THROTTLE CONTROL SYSTEM

Description

INFOID:0000000003806461

The electric throttle control actuator consists of throttle control motor, accelerator pedal position sensor, throttle position sensor, etc. The actuator sends a signal to the ECM, and ECM sends the signal to TCM via CAN communication.

DTC Logic

INFOID:0000000003806462

DTC DETECTION LOGIC

DTC	Item (CONSULT-III screen term)	Malfunction is detected when...	Possible cause
P1726	ELEC TH CONTROL	The electronically controlled throttle for ECM is malfunctioning.	Harness or connectors (Sensor circuit is open or shorted.)

DTC CONFIRMATION PROCEDURE

NOTE:
If "DTC CONFIRMATION PROCEDURE" has been previously performed, always turn ignition switch OFF. Then wait at least 10 seconds before performing the next test.
Perform the following procedure to confirm the malfunction is eliminated after the repair.

1. CHECK DTC DETECTION

With CONSULT-III
1. Turn ignition switch ON.
2. Start engine and let it idle for 5 seconds.
3. Select "Self Diagnostic Results" mode for "TRANSMISSION".

Is "P1726 ELEC TH CONTROL" detected?

YES >> Go to TM-257, "Diagnosis Procedure".
NO >> Check intermittent incident. Refer to GI-35, "Intermittent Incident".

Diagnosis Procedure

INFOID:0000000003806463

1. CHECK DTC WITH ECM

With CONSULT-III
1. Turn ignition switch ON.
2. Select "Self Diagnostic Results" mode for "ENGINE".

Is the inspection result normal?

YES >> GO TO 2.
NO >> Check the DTC Detected Item. Refer to EC-113, "CONSULT-III Function".

2. CHECK DTC WITH TCM

With CONSULT-III
Select "Self Diagnostic Results" mode for "TRANSMISSION".

Is "P1726 ELEC TH CONTROL" detected?

YES >> Replace TCM. Refer to TM-315, "Exploded View".
NO >> GO TO 3.

3. DETECT MALFUNCTIONING ITEMS

Check TCM connector pin terminals for damage or loose connection with harness connector.

Is the inspection result normal?

YES >> Replace TCM. Refer to TM-315, "Exploded View".
NO >> Repair or replace damaged parts.

P1740 LOCK-UP SELECT SOLENOID VALVE

Description

INFOID:0000000003806464

- The lock-up select solenoid valve controls lock-up clutch pressure or forward clutch pressure (reverse brake pressure).
- When controlling lock-up clutch, the valve is turned OFF. When controlling forward clutch, it is turned ON.

DTC Logic

INFOID:0000000003806465

DTC DETECTION LOGIC

DTC	Item (CONSULT-III screen term)	Malfunction is detected when...	Possible cause
P1740	LU-SLCT SOL/CIRC	• Normal voltage is not applied to solenoid due to cut line, short, etc. • TCM detects as irregular by comparing target value with monitor value.	• Lock-up select solenoid valve • Harness or connectors (Solenoid circuit is open or shorted.)

DTC CONFIRMATION PROCEDURE

CAUTION:

Always drive vehicle at a safe speed.

NOTE:

If "DTC CONFIRMATION PROCEDURE" has been previously performed, always turn ignition switch OFF. Then wait at least 10 seconds before performing the next test.

Perform the following procedure to confirm the malfunction is eliminated after the repair.

1. CHECK DTC DETECTION

With CONSULT-III

1. Turn ignition switch ON.
2. Select "Data Monitor" mode for "TRANSMISSION".
3. Start engine and maintain the following conditions for at least 5 consecutive seconds.

RANGE : "D" and "N" positions

(At each time, wait for 5 seconds.)

With GST

Follow the procedure "With CONSULT-III".

Is "P1740 LU-SLCT SOL/CIRC" detected?

YES >> Go to TM-258, "Diagnosis Procedure".
NO >> Check intermittent incident. Refer to GI-35, "Intermittent Incident".

Diagnosis Procedure

INFOID:0000000003806466

1. CHECK LOCK-UP SELECT SOLENOID VALVE CIRCUIT

1. Turn ignition switch OFF.
2. Disconnect TCM connector.
3. Check resistance between TCM vehicle side harness connector terminal and ground.

TCM vehicle side harness connector		Ground	Resistance (Approx.)
Connector	Terminal		
F23	37		17.0 – 38.0 Ω

Is the inspection result normal?

YES >> GO TO 5.
NO >> GO TO 2.

2. CHECK HARNESS BETWEEN TCM AND CVT UNIT (LOCK-UP SELECT SOLENOID VALVE) (PART 1)

1. Disconnect CVT unit connector.
2. Check continuity between TCM vehicle side harness connector terminal and CVT unit vehicle side harness connector terminal.

TCM vehicle side harness connector		CVT unit vehicle side harness connector		Continuity
Connector	Terminal	Connector	Terminal	
F23	37	F24	13	Existed

Is the inspection result normal?

YES >> GO TO 3.
NO >> Repair or replace damaged parts.

3. CHECK HARNESS BETWEEN TCM AND CVT UNIT (LOCK-UP SELECT SOLENOID VALVE) (PART 2)

Check continuity between TCM vehicle side harness connector terminal and ground.

TCM vehicle side harness connector		Ground	Continuity
Connector	Terminal		
F23	37		Not existed

Is the inspection result normal?

YES >> GO TO 4.
NO >> Repair or replace damaged parts.

4. CHECK LOCK-UP SELECT SOLENOID VALVE

Check lock-up select solenoid valve. Refer to TM-259, "Component Inspection (Lock-up Select Solenoid Valve)".

Is the inspection result normal?

YES >> GO TO 5.
NO >> Repair or replace damaged parts.

5. DETECT MALFUNCTIONING ITEMS

Check TCM connector pin terminals for damage or loose connection with harness connector.

Is the inspection result normal?

YES >> Replace TCM. Refer to TM-315, "Exploded View".
NO >> Repair or replace damaged parts.

Component Inspection (Lock-up Select Solenoid Valve)

INFOID:0000000003806467

1. LOCK-UP SELECT SOLENOID VALVE

Check resistance between CVT unit harness connector terminal and ground.

CVT unit harness connector		Ground	Resistance (Approx.)
Connector	Terminal		
F24	13		17.0 – 38.0 Ω

Is the inspection result normal?

YES >> INSPECTION END
NO >> Replace the transaxle assembly. Refer to TM-332, "Exploded View".

P1745 LINE PRESSURE CONTROL

Description

INFOID:0000000003806468

The pressure control solenoid valve A (line pressure solenoid valve) regulates the oil pump discharge pressure to suit the driving condition in response to the signal sent from the TCM.

DTC Logic

INFOID:0000000003806469

DTC DETECTION LOGIC

DTC	Item (CONSULT-III screen term)	Malfunction is detected when...	Possible cause
P1745	L/PRESS CONTROL	TCM detects the unexpected line pressure.	TCM

DTC CONFIRMATION PROCEDURE

NOTE:
If "DTC CONFIRMATION PROCEDURE" has been previously performed, always turn ignition switch OFF. Then wait at least 10 seconds before performing the next test.
Perform the following procedure to confirm the malfunction is eliminated after the repair.

1. CHECK DTC DETECTION

With CONSULT-III
1. Turn ignition switch ON
2. Select "Data Monitor" mode for "TRANSMISSION".
3. Make sure that output voltage of CVT fluid temperature sensor is within the range below.

ATF TEMP SEN : 1.0 – 2.0 V

If out of range, drive the vehicle to decrease the voltage (warm up the fluid) or stop engine to increase the voltage (cool down the fluid)

Is "P1745 L/PRESS CONTROL" detected?

YES >> Go to TM-260, "Diagnosis Procedure".
NO >> Check intermittent incident. Refer to GI-35, "Intermittent Incident".

Diagnosis Procedure

INFOID:0000000003806470

1. CHECK DTC

With CONSULT-III
1. Start engine.
2. Select "Self Diagnostic Results" mode for "TRANSMISSION".

Is the "P1745 L/PRESS CONTROL" displayed?

YES >> Replace TCM. Refer to TM-315, "Exploded View".
NO >> Check intermittent incident. Refer to GI-35, "Intermittent Incident".

P1777 STEP MOTOR

Description

INFOID:0000000003806471

The step motor changes the step by turning 4 coils ON/OFF according to the signal from TCM. As a result, the flow of line pressure to primary pulley is changed and pulley ratio is controlled.

DTC Logic

INFOID:0000000003806472

DTC DETECTION LOGIC

DTC	Item (CONSULT-III screen term)	Malfunction is detected when...	Possible cause
P1777	STEP MOTR CIRC	Each coil of the step motor is not energized properly due to an open or a short.	• Step motor • Harness or connectors (Step motor circuit is open or shorted.)

DTC CONFIRMATION PROCEDURE

CAUTION:
Always drive vehicle at a safe speed.
NOTE:
If "DTC CONFIRMATION PROCEDURE" has been previously performed, always turn ignition switch OFF. Then wait at least 10 seconds before performing the next test.
Perform the following procedure to confirm the malfunction is eliminated after the repair.

1. CHECK DTC DETECTION

With CONSULT-III
1. Start engine.
2. Drive vehicle for at least 5 consecutive seconds.
3. Select "Self Diagnostic Results" mode for "TRANSMISSION".

With GST
Follow the procedure "With CONSULT-III".

Is "P1777 STEP MOTR CIRC" detected?

YES >> Go to TM-261, "Diagnosis Procedure".
NO >> Check intermittent incident. Refer to GI-35, "Intermittent Incident".

Diagnosis Procedure

INFOID:0000000003806473

1. CHECK STEP MOTOR CIRCUIT

1. Turn ignition switch OFF.
2. Disconnect TCM connector.
3. Check resistance between TCM vehicle side harness connector terminals.

TCM vehicle side harness connector			Resistance (Approx.)
Connector	Terminal		
F23	27	28	30.0 Ω
	29	30	

4. Check resistance between TCM vehicle side harness connector terminals and ground.

TCM vehicle side harness connector			Resistance (Approx.)
Connector	Terminal		
F23	27	Ground	15.0 Ω
	28		
	29		
	30		

Is the inspection result normal?

YES >> GO TO 5.
NO >> GO TO 2.

2. CHECK HARNESS BETWEEN TCM AND CVT UNIT (STEP MOTOR) (PART 1)

1. Disconnect CVT unit harness connector.
2. Check continuity between TCM vehicle side harness connector terminals and CVT unit vehicle side harness connector terminals.

TCM vehicle side harness connector		CVT unit vehicle side harness connector		Continuity
Connector	Terminal	Connector	Terminal	
F23	27	F24	9	Existed
	28		8	
	29		7	
	30		6	

Is the inspection result normal?

YES >> GO TO 3.
NO >> Repair or replace damaged parts.

3. CHECK HARNESS BETWEEN TCM AND CVT UNIT (STEP MOTOR) (PART 2)

Check continuity between TCM vehicle side harness connector terminals and ground.

TCM vehicle side harness connector			Continuity
Connector	Terminal		
F23	27	Ground	Not existed
	28		
	29		
	30		

Is the inspection result normal?

YES >> GO TO 4.
NO >> Repair or replace damaged parts.

4. CHECK STEP MOTOR

Check step motor. Refer to TM-263, "Component Inspection (Step Motor)".

Is the inspection result normal?

YES >> GO TO 5.
NO >> Repair or replace damaged parts.

5. DETECT MALFUNCTIONING ITEMS

Check TCM connector pin terminals for damage or loose connection with harness connector.

Is the inspection result normal?

YES >> Replace TCM. Refer to TM-315, "Exploded View".
NO >> Repair or replace damaged parts.

Component Inspection (Step Motor)

INFOID:0000000003806474

1. STEP MOTOR

Check resistance between CVT unit connector terminals and ground.

CVT unit connector			Resistance (Approx.)
Connector	Terminal		
F24	6	7	30.0 Ω
	8	9	

CVT unit connector			Resistance (Approx.)
Connector	Terminal		
F24	6	Ground	15.0 Ω
	7		
	8		
	9		

Is the inspection result normal?

YES >> INSPECTION END

NO >> Replace the transaxle assembly. Refer to TM-332, "Exploded View".

P1778 STEP MOTOR - FUNCTION

Description

INFOID:0000000003806475

- The step motor changes the step by turning 4 coils ON/OFF according to the signal from TCM. As a result, the flow of line pressure to primary pulley is changed and pulley ratio is controlled.
- This diagnosis item is detected when the electrical system is OK, but the mechanical system is NG.
- This diagnosis item is detected when the state of the changing of the speed mechanism in the unit does not operate normally.

DTC Logic

INFOID:0000000003806476

DTC DETECTION LOGIC

DTC	Item (CONSULT-III screen term)	Malfunction is detected when...	Possible cause
P1778	STEP MOTR/FNC	There is a big difference between the number of steps for the stepping motor and for the actual gear ratio.	Step motor

DTC CONFIRMATION PROCEDURE

CAUTION:

- **Always drive vehicle at a safe speed.**
- **Before starting “DTC CONFIRMATION PROCEDURE”, confirm “Hi” or “Mid” or “Low” fixation by “PRI SPEED” and “VEHICLE SPEED” on “Data Monitor”.**
- **If hi-geared fixation occurred, go to TM-264, "Diagnosis Procedure".**

NOTE:

If “DTC Confirmation Procedure” has been previously performed, always turn ignition switch OFF. Then wait at least 10 seconds before performing the next test.

Perform the following procedure to confirm the malfunction is eliminated after the repair.

1. CHECK DTC DETECTION

With CONSULT-III

1. Turn ignition switch ON.
2. Select “Data Monitor” mode for “TRANSMISSION”.
3. Make sure that output voltage of CVT fluid temperature sensor is within the range specified below.

ATF TEMP SEN	**: 1.0 – 2.0 V**

If it is out of range, drive the vehicle to decrease the voltage (warm up the fluid) or stop engine to increase the voltage (cool down the fluid)

4. Start engine and maintain the following conditions for at least 30 consecutive seconds.

Start test from 0 km/h (0 MPH)	
Constant acceleration	**: Keep 30 sec or more**
VEHICLE SPEED	**: 10 km/h (6 MPH) or more**
ACC PEDAL OPEN	**: More than 1.0/8**
RANGE	**: “D” position**
ENG SPEED	**: 450 rpm or more**

With GST.

Follow the procedure “With CONSULT-III”.

Is “P1778 STEP MOTR/FNC” detected?

YES >> Go to TM-264, "Diagnosis Procedure".
NO >> Check intermittent incident. Refer to GI-35, "Intermittent Incident".

Diagnosis Procedure

INFOID:0000000003806477

1. CHECK STEP MOTOR SYSTEM

Check step motor system. Refer to TM-261, "Description".

Is the inspection result normal?

YES >> GO TO 2.
NO >> Repair or replace damaged parts.

2. CHECK INPUT SPEED SENSOR (PRIMARY SPEED SENSOR) SYSTEM

Check input speed sensor (primary speed sensor) system. Refer to TM-218, "Description".

Is the inspection result normal?

YES >> GO TO 3.
NO >> Repair or replace damaged parts.

3. CHECK OUTPUT SPEED SENSOR (SECONDARY SPEED SENSOR) SYSTEM

Check output speed sensor (secondary speed sensor) system. Refer to TM-222, "Description".

Is the inspection result normal?

YES >> GO TO 4.
NO >> Repair or replace damaged parts.

4. DETECT MALFUNCTIONING ITEMS

Check TCM connector pin terminals for damage or loose connection with harness connector.

Is the inspection result normal?

YES >> Replace TCM. Refer to TM-315, "Exploded View".
NO >> Repair or replace damaged parts.

SHIFT POSITION INDICATOR CIRCUIT

Description

INFOID:0000000003806478

TCM sends position indicator signals to combination meter via CAN communication line.

Component Function Check

INFOID:0000000003806479

1.CHECK SHIFT POSITION INDICATOR

CAUTION:
Always drive vehicle at a safe speed.

1. Start engine.
2. Check that correct selector lever position (“P”, “N”, “R”, “D” or “L”) is displayed as selector lever is moved into each position.

Is the inspection result normal?

YES >> INSPECTION END
NO >> Go to TM-266, "Diagnosis Procedure".

Diagnosis Procedure

INFOID:0000000003806480

1.CHECK INPUT SIGNALS

With CONSULT-III

1. Start engine.
2. Select “RANGE” on “Data Monitor” mode for “TRANSMISSION” and read out the value.
3. Check that correct selector lever position (“P”, “N”, “R”, “D” or “L”) is displayed as selector lever is moved into each position.

Is the inspection result normal?

YES >> INSPECTION END
NO-1 [The actual gear position does not change, or shifting into the manual mode is not possible (no gear shifting in the manual mode possible). Or the shift position indicator is not indicated.]>>Check the following.
- Check sport mode switch. Refer to TM-272, "Description".
- Check CVT main system (Fail-safe function actuated).
  - Check “Self Diagnostic Results” mode for “TRANSMISSION”.

NO-2 (The actual gear position changes, but the shift position indicator is not indicated.)>>
- Check “Self Diagnostic Results” mode for “TRANSMISSION”.

NO-3 (The actual gear position and the indication on the shift position indicator do not coincide.)>>
- Check “Self Diagnostic Results” mode for “TRANSMISSION”.

NO-4 (Only a specific position or positions is/are not indicated on the shift position indicator.)>>
- Check the combination meter. Refer to MWI-33, "CONSULT-III Function (METER/M&A)".

SHIFT LOCK SYSTEM

Description

INFOID:0000000003806481

Component	Function
Shift lock solenoid	It operates according to the signal from the stop lamp switch and moves the lock lever.
Lock lever	It moves according to the operation of the shift lock solenoid and performs the release of the shift lock.
Detent rod	It links with the selector button and restricts the selector lever movement.
Park position switch	It detects that the selector lever is in P position.
Key interlock cable and key interlock rod	It transmits the lock lever operation to the slider in the key cylinder.
Shift lock release button	It moves the lock lever forcibly.

Wiring Diagram - CVT SHIFT LOCK SYSTEM -

INFOID:0000000003806482

CVT SHIFT LOCK SYSTEM

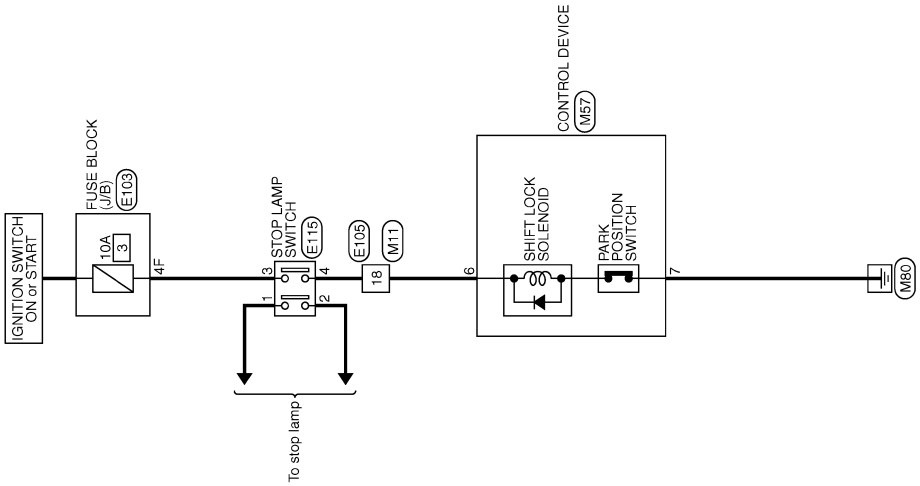

2008/01/23

JCDWM0253GI

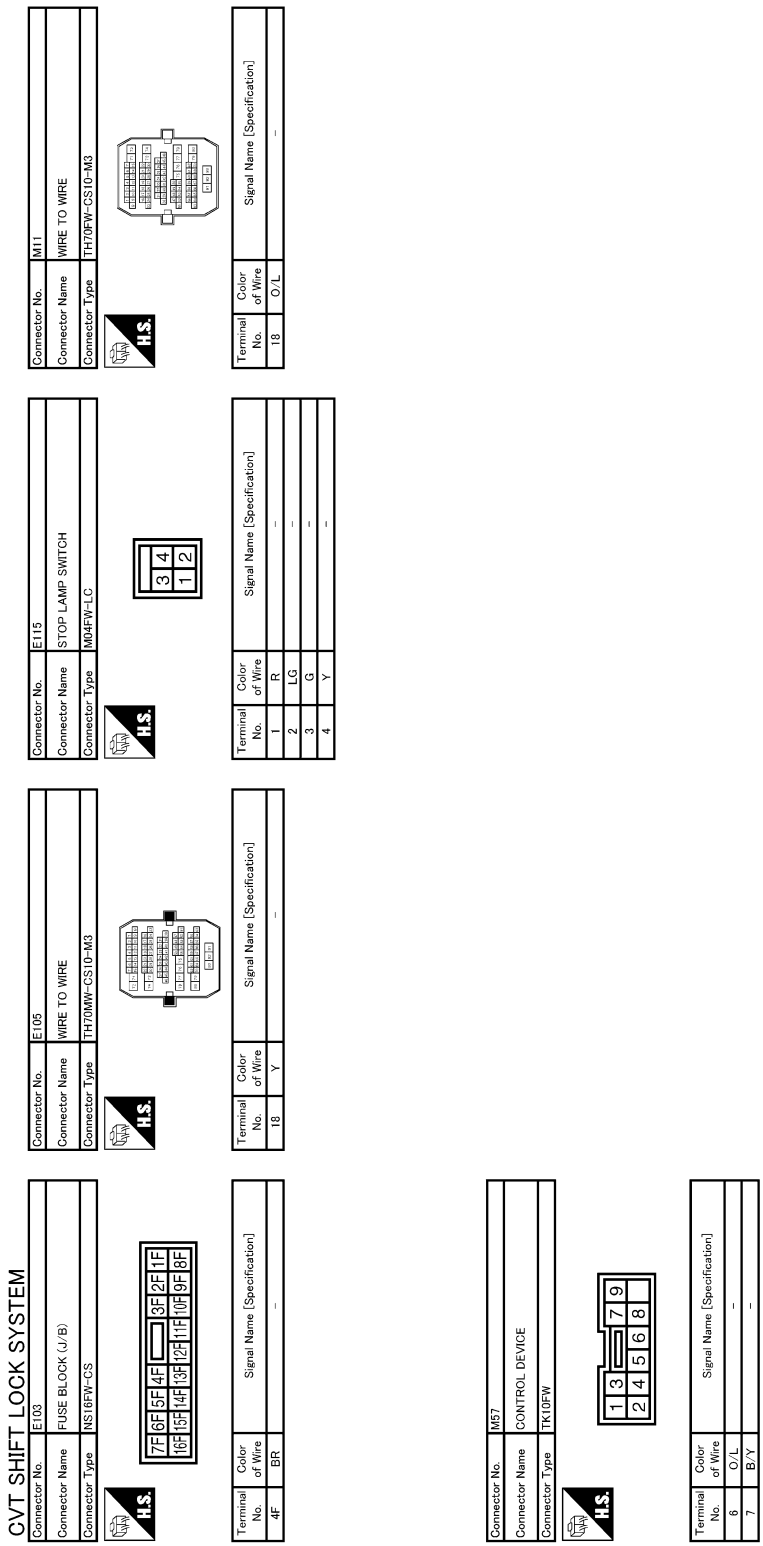

JCDWM0254GI

Component Function Check

INFOID:0000000003806483

1. CHECK CVT SHIFT LOCK OPERATION

1. Turn ignition switch ON.
2. Shift the selector lever to the “P” position.
3. Attempt to shift the selector lever to any other position with the brake pedal released.

Can the selector lever be shifted to any other position?

YES >> Go to TM-270, "Diagnosis Procedure".
NO >> GO TO 2.

2. CHECK CVT SHIFT LOCK OPERATION

Attempt to shift the selector lever to any other position with the brake pedal depressed.

Can the selector lever be shifted to any other position?

YES >> INSPECTION END
NO >> Go to TM-270, "Diagnosis Procedure".

Diagnosis Procedure

INFOID:0000000003806484

1. CHECK POWER SOURCE

1. Turn ignition switch OFF.
2. Disconnect stop lamp switch connector.
3. Turn ignition switch ON.
4. Check voltage between stop lamp switch vehicle side harness connector and ground.

Stop lamp switch vehicle side harness connector		Ground	Voltage (Approx.)
Connector	Terminal		
E115	3		Battery Voltage

Is the inspection result normal?

YES >> GO TO 2.
NO >>
- Harness for short or open between fuse block J/B connector terminal 4F and stop lamp switch harness connector terminal 3
- 10 A fuse [No. 3, located in the J/B]
- Ignition switch

2. CHECK STOP LAMP SWITCH

Check stop lamp switch. Refer to TM-271, "Component Inspection (Stop Lamp Switch)".

Is the inspection result normal?

YES >> GO TO 3.
NO >> Repair or replace damaged parts.

3. CHECK HARNESS BETWEEN STOP LAMP SWITCH AND CONTROL DEVICE (PART 1)

1. Turn ignition switch OFF.
2. Disconnect control device connector.
3. Check continuity between stop lamp switch vehicle side harness connector terminal and control device vehicle side harness connector terminal.

Stop lamp vehicle side harness connector		Control device vehicle side harness connector		Continuity
Connector	Terminal	Connector	Terminal	
E115	4	M57	6	Existed

Is the inspection result normal?

YES >> GO TO 4.
NO >> Repair or replace damaged parts.

4. CHECK HARNESS BETWEEN STOP LAMP SWITCH AND CONTROL DEVICE (PART 2)

Check continuity between stop lamp switch vehicle side harness connector terminal and ground.

Stop lamp vehicle side harness connector		Ground	Continuity
Connector	Terminal		
E115	4		Not existed

Is the inspection result normal?

YES >> GO TO 5.
NO >> Repair or replace damaged parts.

5. CHECK GROUND CIRCUIT

Check voltage between control device vehicle side harness connector terminal and ground.

Control device vehicle side harness connector		Ground	Continuity
Connector	Terminal		
M57	7		Existed

Is the inspection result normal?

YES >> GO TO 6.
NO >> Repair or replace damaged parts.

6. CHECK CONTROL DEVICE

1. Shift selector lever to “P” position.
2. Check continuity between control device connector.

Control device connector			Continuity
Connector	Terminal		
M57	6	7	Existed

Is the inspection result normal?

YES >> INSPECTION END
NO >> Replace control device. Refer to TM-155, "Exploded View".

Component Inspection (Stop Lamp Switch)

INFOID:0000000003806485

1. CHECK STOP LAMP SWITCH

Check continuity between stop lamp switch connector terminals 3 and 4.

Stop lamp switch connector			Condition	Continuity
Connector	Terminal			
E115	3	4	Depressed brake pedal	Existed
			Released brake pedal	Not existed

Is the inspection result normal?

YES >> INSPECTION END
NO >> Replace stop lamp switch. Refer to BR-17, "Exploded View".

SPORT MODE SWITCH

Description

INFOID:0000000003847160

- The sport mode switch is installed to the selector lever knob.
- When pushing the sport mode switch (SPORT indicator lamp turns ON), the driving condition becomes sport mode. When pushing again the sport mode switch (SPORT indicator lamp turns OFF), the driving condition changes to D range.

Component Function Check

INFOID:0000000003847161

1.CHECK SPORT MODE SWITCH SIGNAL

1. Turn ignition switch ON.
2. Select “Data Monitor” mode for “TRANSMISSION”.
3. Check the ON/OFF operations of monitor item.

Monitor item	Condition	Status
SPORT MODE SW	While pushing sport mode switch	On
	Other conditions	Off

Is the inspection result normal?

YES >> INSPECTION END.
NO >> Go to TM-272, "Diagnosis Procedure".

Diagnosis Procedure

INFOID:0000000003847162

1. CHECK CAN COMMUNICATION CIRCUIT

Perform “Self Diagnostic Results” mode for “TRANSMISSION”.

Is “U1000 CAN COMM CIRCUIT” indicated?

YES >> Check CAN communication line. Refer to TM-208, "Description".
NO >> GO TO 2.

2.CHECK COMBINATION METER

Perform “Self Diagnostic Results” mode for “METER/M&A”.

Is the inspection result normal?

YES >> GO TO 3.
NO >> Check DTC detected item. Refer to MWI-67, "DTC Index".

3.CHECK SPORT MODE SWITCH CIRCUIT

1. Turn ignition switch OFF.
2. Disconnect control device connector.
3. Turn ignition switch ON.
4. Check voltage between control device vehicle side harness connector terminals.

Control device vehicle side harness connector			Voltage (Approx.)
Connector	Terminal		
	(+)	(–)	
M57	1	4	5 V

Is the inspection result normal?

YES >> GO TO 4.
NO >> GO TO 6.

4.CHECK SPORT MODE SWITCH

Check continuity between control device connector terminals.

Control device connector			Condition	Continuity
Connector	Terminal			
M57	1	4	While pushing sport mode switch	Existed
			Other condition	Not existed

Is the inspection result normal?

YES >> GO TO 5.
NO >> Repair or replace damaged parts.

5. CHECK MALFUNCTIONING ITEM

Check control device connector pin terminals for damage or loose connection with harness connector.

Is the inspection result normal?

YES >> GO TO 10.
NO >> Repair or replace damaged parts.

6. CHECK GROUND CIRCUIT

Check continuity between control device vehicle side harness connector terminal and ground.

Control device vehicle side harness connector		Ground	Continuity
Connector	Terminal		
M57	4		Existed

Is the inspection result normal?

YES >> GO TO 7.
NO >> Repair or replace damaged parts.

7. CHECK HARNESS BETWEEN CONTROL DEVICE AND COMBINATION METER (PART 1)

1. Turn ignition switch OFF.
2. Disconnect combination meter connector.
3. Check continuity between control device vehicle side harness connector terminal and combination meter vehicle side harness connector terminal.

Control device vehicle side harness connector		Combination meter vehicle side harness connector		Continuity
Connector	Terminal	Connector	Terminal	
M57	1	M34	32	Existed

Is the inspection result normal?

YES >> GO TO 8.
NO >> Repair or replace damaged parts.

8. CHECK HARNESS BETWEEN CONTROL DEVICE AND COMBINATION METER (PART 2)

Check continuity between control device vehicle side harness connector terminal and ground.

Control device vehicle side harness connector		Ground	Continuity
Connector	Terminal		
M57	1		Not existed

Is the inspection result normal?

YES >> GO TO 9.
NO >> Repair or replace damaged parts.

9. DETECT MALFUNCTIONING ITEMS

Check combination meter connector pin terminals for damage or loose connection with harness connector.

Is the inspection result normal?

YES >> GO TO 10.
NO >> Repair or replace damaged parts.

10. CHECK COMBINATION METER

1. Reconnect all the connectors.
2. Turn ignition switch ON.
3. Select “O/D OFF SW” on “Data Monitor” mode for “METER/M&A”, and check the ON/OFF operations of monitor item. Refer to MWI-53, "Reference Value".

Is the inspection result normal?

YES >> GO TO 11.
NO >> Replace combination meter. Refer to MWI-126, "Exploded View".

11. DETECT MALFUNCTIONING ITEMS

Check TCM connector pin terminals for damage or loose connection with harness connector.

Is the inspection result normal?

YES >> Replace TCM. Refer to TM-315, "Exploded View".
NO >> Repair or replace damaged parts.

ECU DIAGNOSIS

TCM

Reference Value

INFOID:0000000003806487

VALUES ON THE DIAGNOSIS TOOL

Item name	Condition	Display value (Approx.)
VSP SENSOR	During driving	Approximately matches the speedometer reading.
ESTM VSP SIG	During driving	Approximately matches the speedometer reading.
PRI SPEED SEN	During driving (lock-up ON)	Approximately matches the engine speed.
ENG SPEED SIG	Engine running	Closely matches the tachometer reading.
SEC HYDR SEN	“N” position idle	1.0 V
PRI HYDR SEN	“N” position idle	0.7 – 3.5 V
ATF TEMP SEN*	When CVT fluid temperature is 20°C (68°F)	2.0 V
	When CVT fluid temperature is 80°C (176°F)	1.0 V
VIGN SEN	Ignition switch: ON	Battery voltage
VEHICLE SPEED	During driving	Approximately matches the speedometer reading.
PRI SPEED	During driving (lock-up ON)	Approximately matches the engine speed.
SEC SPEED	During driving	45 X Approximately matches the speedometer reading.
ENG SPEED	Engine running	Closely matches the tachometer reading.
GEAR RATIO	During driving	2.34 – 0.39
ACC PEDAL OPEN	Released accelerator pedal - Fully depressed accelerator pedal	0.0/8 – 8.0/8
SEC PRESS	“N” position idle	1.3 MPa
STM STEP	During driving	–20 step – 190 step
ISOLT1	Lock-up “OFF”	0.0 A
	Lock-up “ON”	0.7 A
ISOLT2	Release foot from the accelerator pedal.	0.8 A
	Press the accelerator pedal all the way down.	0.0 A
ISOLT3	Secondary pressure low - Secondary pressure high	0.8 – 0.0 A
SOLMON1	Lock-up “OFF”	0.0 A
	Lock-up “ON”	0.7 A
SOLMON2	“N” position idle	0.8 A
	When stalled	0.3 – 0.6 A
SOLMON3	“N” position idle	0.6 – 0.7 A
	When stalled	0.4 – 0.6 A
P POSITION SW	Selector lever in “P” position	On
	Other than the above position.	Off
R POSITION SW	Selector lever in “R” position	On
	Other than the above position.	Off
N POSITION SW	Selector lever in “N“ position	On
	Other than the above position.	Off

Item name	Condition	Display value (Approx.)
D POSITION SW	Selector lever in “D” position	On
	Other than the above position.	Off
L POSITION SW	Selector lever in “L” position	On
	Other than the above position.	Off
BRAKE SW	Depressed brake pedal	On
	Released brake pedal	Off
FULL SW	Fully depressed accelerator pedal	On
	Released accelerator pedal	Off
IDLE SW	Released accelerator pedal	On
	Fully depressed accelerator pedal	Off
SPORT MODE SW	While pushing sport mode switch	On
	Other conditions	Off
INDLRNG	Selector lever in “L” position	On
	When setting selector lever to other positions.	Off
INDDRNG	Selector lever in “D” position	On
	When setting selector lever to other positions.	Off
INDNRNG	Selector lever in “N“ position	On
	When setting selector lever to other positions.	Off
INDRRNG	Selector lever in “R” position	On
	When setting selector lever to other positions.	Off
INDPRNG	Selector lever in “P” position	On
	When setting selector lever to other positions.	Off
SPORT MODE IND	When sport mode	On
	Other conditions	Off
SMCOIL A	During driving	Changes On ⇔ Off.
SMCOIL B	During driving	Changes On ⇔ Off.
SMCOIL C	During driving	Changes On ⇔ Off.
SMCOIL D	During driving	Changes On ⇔ Off.
LUSEL SOL OUT	Selector lever in “P” and “N” positions	On
	Wait at least for 5 seconds with the selector lever in “R” and “D” positions	Off
LUSEL SOL MON	Selector lever in “P” and “N” positions	On
	Wait at least for 5 seconds with the selector lever in “R” and “D” positions	Off
ABS ON	ABS operate	On
	Other conditions	Off
RANGE	Selector lever in “N” and “P” position	N·P
	Selector lever in “R” position	R
	Selector lever in “D” position	D
	Selector lever in “L” position	L

*Means CVT fluid temperature. Convert numerical values for actual fluid temperature °C (°F). Refer to TM-301, "ATFTEMP_COUNT Conversion Table".

TERMINAL LAYOUT

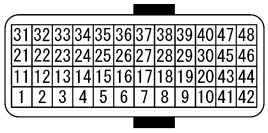

SCIA6679J

PHYSICAL VALUES

Terminal No. (wire color)		Description		Condition		Value (Approx.)
+	–	Signal name	Input/Output			
1 (P/B)	Ground	R RANGE SW	Input	Ignition switch ON	Selector lever in “R” position	Battery voltage
					Other than the above position	0 V
2 (P/L)	Ground	N RANGE SW	Input		Selector lever in “N” position	Battery voltage
					Other than the above position	0 V
3 (G/O)	Ground	D RANGE SW	Input		Selector lever in “D” positions	Battery voltage
					Other than the above position	0 V
4 (GR)	Ground	L RANGE SW	Input		Selector lever in “L” position	Battery voltage
					Other than the above position	0 V
5 (B)	Ground	Ground	Output	Always		0 V
6 (O)	Ground	K-LINE	Input/Output	—		—
7 (W)	Ground	Sensor ground	Input	Always		0 V
8 (G/W)	—	CLOCK (SEL2)	—	—		—
9 (L/R)	—	CHIP SELECT (SEL1)	—	—		—
10 (BR/R)	—	DATA I/O (SEL3)	—	—		—
11 (BR/W)	Ground	P RANGE SW	Input	Ignition switch ON	Selector lever in “P” position	Battery voltage
					Other than the above position	0 V
13 (V)	Ground	CVT fluid temperature sensor	Input	Ignition switch ON	When CVT fluid temperature is 20°C (68°F)	2.0 V
					When CVT fluid temperature is 80°C (176°F)	1.0 V
15 (V/W)	Ground	Transmission fluid pressure sensor A (Secondary pressure sensor)	Input	“N” position idle		1.0 V
25 (W/R)	Ground	Sensor ground	Input	Always		0 V

Terminal No. (wire color)		Description		Condition		Value (Approx.)
+	–	Signal name	Input/Output			
26 (L/O)	Ground	Sensor power	Output	Ignition switch ON		5.0 V
				Ignition switch OFF		0 V
27 (R/G)	Ground	Step motor D	Output	Within 2 seconds after ignition switch ON, measure the time using the pulse width measurement function (Hi level) of CONSULT-III.* **CAUTION: Connect the diagnosis data link cable to the vehicle diagnosis connector.**		10.0 msec
28 (R)	Ground	Step motor C	Output			30.0 msec
29 (O/B)	Ground	Step motor B	Output			10.0 msec
30 (G/R)	Ground	Step motor A	Output			30.0 msec
31 (P)	—	CAN-L	Input/Output	—		—
32 (L)	—	CAN-H	Input/Output	—		—
33 (SB)	Ground	Input speed sensor (Primary speed sensor)	Input	When driving [“L” position, 20 km/h (12 MPH)]		950 Hz
34 (LG/R)	Ground	Output speed sensor (Secondary speed sensor)	Input	When driving [“D” position, 20 km/h (12 MPH)]		490 Hz
37 (V/R)	Ground	Lock-up select solenoid valve	Output	Ignition switch ON	Selector lever in “P” or “N” positions	Battery voltage
					Wait at least for 5 seconds with the selector lever in “R” or “D” positions.	0 V
38 (L/W)	Ground	Torque converter clutch solenoid valve	Output	When vehicle cruises in “D” position	When CVT performs lock-up	6.0 V
					When CVT does not perform lock-up	1.5 V
39 (W/B)	Ground	Pressure control solenoid valve B (Secondary pressure solenoid valve)	Output	“P” or “N” position idle	Release your foot from the accelerator pedal.	5.0 – 7.0 V
					Press the accelerator pedal all the way down.	3.0 – 4.0 V
40 (R/Y)	Ground	Pressure control solenoid valve A (Line pressure solenoid valve)	Output		Release your foot from the accelerator pedal.	5.0 – 7.0 V
					Press the accelerator pedal all the way down.	1.0 V
42 (B)	Ground	Ground	Output	Always		0 V
45 (L/R)	Ground	Power supply (memory back-up)	Input	Always		Battery voltage
46 (Y)	Ground	Power supply	Input	Ignition switch ON		Battery voltage
				Ignition switch OFF		0 V
47 (L/R)	Ground	Power supply (memory back-up)	Input	Always		Battery voltage
48 (Y)	Ground	Power supply	Input	Ignition switch ON		Battery voltage
				Ignition switch OFF		0 V

*: A circuit tester cannot be used to test this item.

Wiring Diagram - CVT CONTROL SYSTEM -

INFOID:0000000003806488

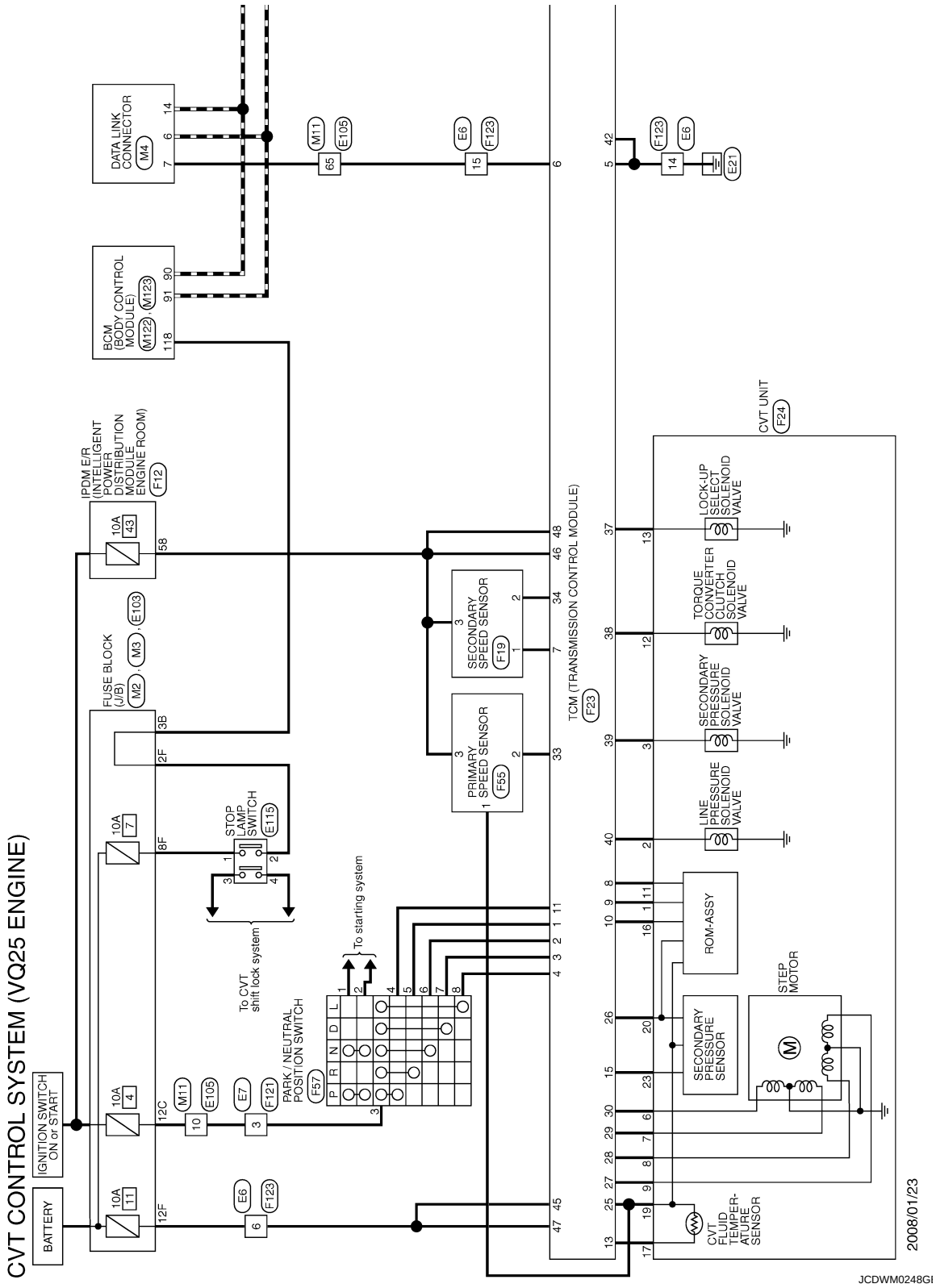

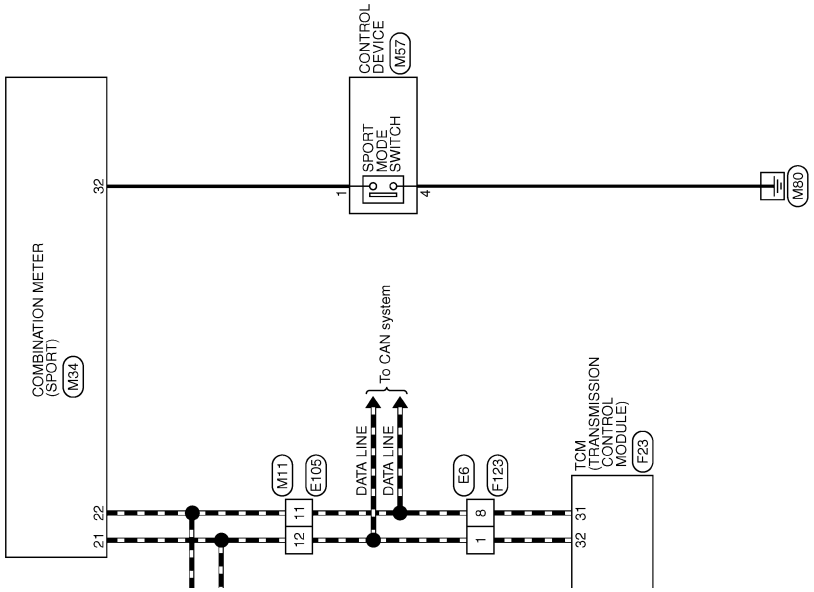

JCDWM0249GI

CVT CONTROL SYSTEM (VQ25 ENGINE)

Connector No.	E6
Connector Name	WIRE TO WIRE
Connector Type	TK16MGY-1V

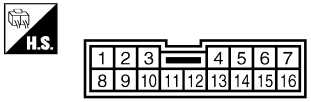

Terminal No.	Color of Wire	Signal Name [Specification]
1	L	–
6	V	–
8	P	–
14	B/W	–
15	O	–

Connector No.	E7
Connector Name	WIRE TO WIRE
Connector Type	NS10MW-CS

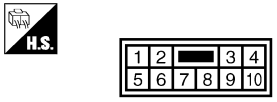

Terminal No.	Color of Wire	Signal Name [Specification]
3	LG	–

Connector No.	E103
Connector Name	FUSE BLOCK (J/B)
Connector Type	NS16FW-CS

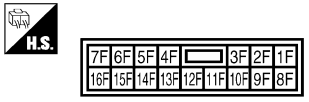

Terminal No.	Color of Wire	Signal Name [Specification]
2F	LG	–
8F	R	–
12F	V	–

Connector No.	E105
Connector Name	WIRE TO WIRE
Connector Type	TH70MW-CS10-M3

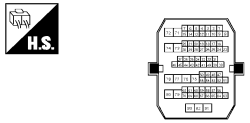

Terminal No.	Color of Wire	Signal Name [Specification]
10	LG	–
11	P	–
12	L	–
65	O	–

Connector No.	E115
Connector Name	STOP LAMP SWITCH
Connector Type	M04FW-LC

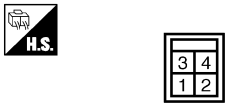

Terminal No.	Color of Wire	Signal Name [Specification]
1	R	–
2	LG	–
3	G	–
4	Y	–

Connector No.	F12
Connector Name	IPDM E/R (INTELLIGENT POWER DISTRIBUTION MODULE ENGINE ROOM)
Connector Type	TH20FW-CS12-M4

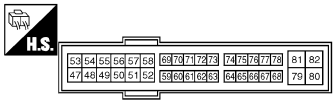

Terminal No.	Color of Wire	Signal Name [Specification]
58	Y	–

Connector No.	F19
Connector Name	SECONDARY SPEED SENSOR
Connector Type	RK03FB

Terminal No.	Color of Wire	Signal Name [Specification]
1	W	–
2	LG/R	–
3	Y	–

JCDWM0250GI

CVT CONTROL SYSTEM (VQ25 ENGINE)

Connector No.	F23
Connector Name	TCM (TRANSMISSION CONTROL MODULE)
Connector Type	RH40FB-RZ8-L-RH

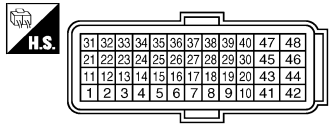

Terminal No.	Color of Wire	Signal Name [Specification]
1	P/B	R RANGE SW [With VQ25 engine]
2	P/L	N RANGE SW [With VQ25 engine]
3	G/O	D RANGE SW [With VQ25 engine]
4	GR	L RANGE SW [With VQ25 engine]
5	B	GND
6	O	K-LINE
7	W	SENSOR GND
8	G/W	CLOCK (SEL2)
9	L/R	CHIP SELECT (SEL1)
10	BR/R	DATA I/O (SEL3)
11	BR/W	P RANGE SW [With VQ25 engine]
13	V	CVT FLUID TEMP SENSOR [With VQ25 engine]
15	V/W	SECONDARY PRESSURE SENSOR [With VQ25 engine]
25	W/R	SENSOR GND
26	L/O	SENSOR POWER SOURCE(5V)
27	R/G	STEP MOTOR D [With VQ25 engine]
28	R	STEP MOTOR C [With VQ25 engine]
29	O/B	STEP MOTOR B [With VQ25 engine]
30	G/R	STEP MOTOR A [With VQ25 engine]
31	P	CAN-L
32	L	CAN-H
33	SB	PRIMARY SPEED SENSOR [With VQ25 engine]
34	LG/R	SECONDARY SPEED SENSOR [With VQ25 engine]
37	V/R	L/U SELECT SOLENOID VALVE [With VQ25 engine]
38	L/W	TORQE CONVERTER CLUTCH SOLENOID VALVE [With VQ25 engine]
39	W/B	SECONDARY PRESSURE SOLENOID VALVE [With VQ25 engine]
40	R/Y	LINE PRESSURE SOLENOID VALVE [With VQ25 engine]
42	B	GND
45	L/R	BATT
46	Y	VIGN
47	L/R	BATT
48	Y	VIGN

Connector No.	F24
Connector Name	CVT UNIT
Connector Type	Yazaki 7283-8750-30

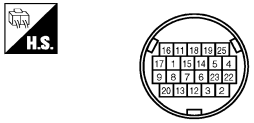

Terminal No.	Color of Wire	Signal Name [Specification]
1	L/R	–
2	R/Y	–
3	W/B	–
6	G/R	–
7	O/B	–
8	R	–
9	R/G	–
11	G/W	–
12	L/W	–
13	V/R	–
16	BR/R	–
17	V	–
19	W/R	–
20	L/O	–
23	V/W	–

Connector No.	F55
Connector Name	PRIMARY SPEED SENSOR
Connector Type	RK03FB

Terminal No.	Color of Wire	Signal Name [Specification]
1	W/R	–
2	SB	–
3	Y	–

Connector No.	F57
Connector Name	PARK / NEUTRAL POSITION SWITCH
Connector Type	YDX06FB-HS4

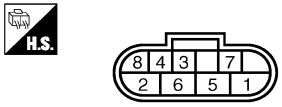

Terminal No.	Color of Wire	Signal Name [Specification]
1	Y	–
2	R/B	–
3	LG	–
4	BR/W	–
5	P/B	–
6	P/L	–
7	G/O	–
8	GR	–

Connector No.	F121
Connector Name	WIRE TO WIRE
Connector Type	NS10FW-CS

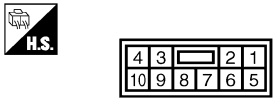

Terminal No.	Color of Wire	Signal Name [Specification]
3	O	–

Connector No.	F123
Connector Name	WIRE TO WIRE
Connector Type	TK16FGY-1V

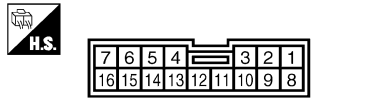

Terminal No.	Color of Wire	Signal Name [Specification]
1	L	–
6	L/R	–
8	P	–
14	B	–
15	O	–

JCDWM0251GI

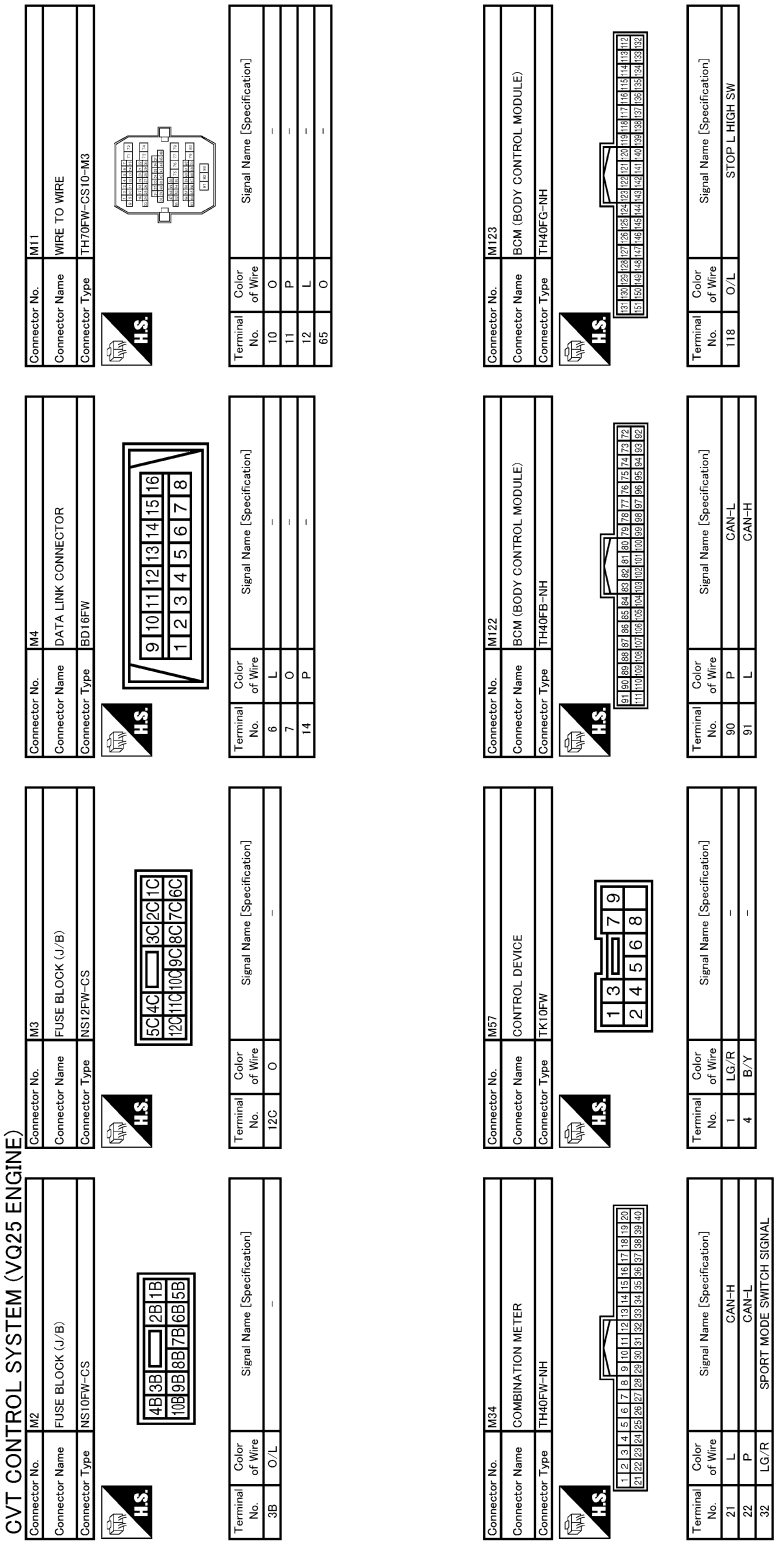

JCDWM0252GI

Fail-safe

INFOID:0000000003806489

The TCM has an electrical fail-safe mode. In this mode TCM is operates even if there is an error in a main electronic control input/output signal circuit.

FAIL-SAFE FUNCTION

If any malfunction occurs in a sensor or solenoid, this function controls the CVT to make driving possible.

Output Speed Sensor (Secondary Speed Sensor)
The shift pattern is changed in accordance with throttle position when an unexpected signal is sent from the output speed sensor (secondary speed sensor) to the TCM. The manual mode is inhibited, and the transaxle is put in “D”.

Input Speed Sensor (Primary Speed Sensor)
The shift pattern is changed in accordance with throttle position and secondary speed (vehicle speed) when an unexpected signal is sent from the input speed sensor (primary speed sensor) to the TCM. The manual mode is inhibited, and the transaxle is put in “D”.

PNP Switch
If an unexpected signal is sent from the PNP switch to the TCM, the transaxle is put in “D”.

CVT Fluid Temperature Sensor
If an unexpected signal is sent from the CVT fluid temperature sensor to the TCM, the gear ratio in use before receiving the unexpected signal is maintained or the gear ratio is controlled to keep engine speed under 5000 rpm.

Transmission Fluid Pressure Sensor A (Secondary Pressure Sensor)
- If an unexpected signal is sent from the transmission fluid pressure sensor A (secondary pressure sensor) to the TCM, the secondary pressure feedback control is stopped and the offset value obtained before the non-standard condition occurs is used to control line pressure.
- If transmission fluid pressure sensor A (secondary pressure sensor) error signal is input to TCM, secondary pressure feedback control stops, but line pressure is controlled normally.

Pressure Control Solenoid A (Line Pressure Solenoid valve)
If an unexpected signal is sent from the solenoid to the TCM, the pressure control solenoid A (line pressure solenoid valve) is turned OFF to achieve the maximum fluid pressure.

Pressure Control Solenoid B (Secondary Pressure Solenoid valve)
If an unexpected signal is sent from the solenoid to the TCM, the pressure control solenoid B (secondary pressure solenoid valve) is turned OFF to achieve the maximum fluid pressure.

Torque Converter Clutch Solenoid valve
If an unexpected signal is sent from the solenoid to the TCM, the torque converter clutch solenoid valve is turned OFF to cancel the lock-up.

Step Motor
If an unexpected signal is sent from the step motor to the TCM, the step motor coil phases “A” through “D” are all turned OFF to hold the gear ratio used just before the non-standard condition occurred.

CVT Lock-up Select Solenoid valve
If an unexpected signal is sent from the solenoid to the TCM, the CVT lock-up select solenoid valve is turned OFF to cancel the lock-up.

TCM Power Supply (Memory Back-up)
Transaxle assembly is protected by limiting the engine torque when the memory back-up power supply (for controlling) from the battery is not supplied to TCM. Normal status is restored when turning the ignition switch OFF to ON after the normal power supply.

DTC Inspection Priority Chart

INFOID:0000000003806490

If some DTCs are displayed at the same time, perform inspections one by one based on the following priority chart.

NOTE:
If DTC “U1000 CAN COMM CIRCUIT” is displayed with other DTCs, first perform the trouble diagnosis for “DTC U1000 CAN COMMUNICATION LINE”. Refer to TM-208.

Priority	Detected items (DTC)
1	U1000 CAN communication line
2	Except above

DTC Index

INFOID:0000000003806491

NOTE:

If DTC "U1000 CAN COMM CIRCUIT" is displayed with other DTCs, first perform the trouble diagnosis for "DTC U1000 CAN COMMUNICATION LINE". Refer to TM-208.

DTC*1		Items (CONSULT-III screen terms)	Reference
MI*2, "ENGINE" with CONSULT-III or GST	CONSULT-III only "TRANSMISSION"		
—	P0703	BRAKE SW/CIRC	TM-210
P0705	P0705	PNP SW/CIRC	TM-213
P0710	P0710	ATF TEMP SEN/CIRC	TM-216
P0715	P0715	INPUT SPD SEN/CIRC	TM-218
P0720	P0720	VEH SPD SEN/CIR AT	TM-222
—	P0725	ENGINE SPEED SIG	TM-226
—	P0730	BELT DAMG	TM-228
P0740	P0740	TCC SOLENOID/CIRC	TM-230
P0744	P0744	A/T TCC S/V FNCTN	TM-232
P0745	P0745	L/PRESS SOL/CIRC	TM-234
P0746	P0746	PRS CNT SOL/A FCTN	TM-236
P0776	P0776	PRS CNT SOL/B FCTN	TM-238
P0778	P0778	PRS CNT SOL/B CIRC	TM-240
P0840	P0840	TR PRS SENS/A CIRC	TM-242
—	P0841	PRESS SEN/FNCTN	TM-245
—	P0868	SEC/PRESS DOWN	TM-247
—	P1701	TCM-POWER SUPPLY	TM-249
—	P1705	TP SEN/CIRC A/T	TM-252
—	P1722	ESTM VEH SPD SIG	TM-253
—	P1723	CVT SPD SEN/FNCTN	TM-255
—	P1726	ELEC TH CONTROL	TM-257
P1740	P1740	LU-SLCT SOL/CIRC	TM-258
—	P1745	L/PRESS CONTROL	TM-260
P1777	P1777	STEP MOTR CIRC	TM-261
P1778	P1778	STEP MOTR/FNC	TM-264
U1000	U1000	CAN COMM CIRCUIT	TM-208
—	U1010	CONTROL UNIT (CAN)	TM-209

*1: These numbers are prescribed by ISO 15031-6.

*2: Refer to TM-202, "Diagnosis Description".

SYMPTOM DIAGNOSIS

SYSTEM SYMPTOM

Symptom Table

INFOID:0000000003806492

The diagnostics item numbers show the sequence for inspection. Inspect in order from item 1.

No.	Item	Symptom	Condition	Diagnostic Item	Reference
1	Shift Shock	Large shock. (“N”→ “D” position)	ON vehicle	1. Engine idle speed	EC-14
				2. Engine speed signal	TM-226
				3. Accelerator pedal position sensor	TM-252
				4. CVT position	TM-314
				5. CVT fluid temperature sensor	TM-216
				6. CAN communication line	TM-208
				7. CVT fluid level and state	TM-304
				8. Line pressure test	TM-308
				9. Torque converter clutch solenoid valve	TM-230
				10. Lock-up select solenoid valve	TM-258
				11. PNP switch	TM-213
			OFF vehicle	12. Forward clutch	TM-332
				13. Control valve	
2		Large shock. (“N”→ “R” position)	ON vehicle	1. Engine idle speed	EC-14
				2. Engine speed signal	TM-226
				3. Accelerator pedal position sensor	TM-252
				4. CVT position	TM-314
				5. CVT fluid temperature sensor	TM-216
				6. CAN communication line	TM-208
				7. CVT fluid level and state	TM-304
				8. Line pressure test	TM-308
				9. Torque converter clutch solenoid valve	TM-230
				10. Lock-up select solenoid valve	TM-258
				11. PNP switch	TM-213
			OFF vehicle	12. Reverse brake	TM-332
				13. Control valve	
3		Shock is too large for lock-up.	ON vehicle	1. CVT position	TM-314
				2. Engine speed signal	TM-226
				3. CAN communication line	TM-208
				4. CVT fluid level and state	TM-304
			OFF vehicle	5. Torque converter	TM-335
				6. Control valve	TM-332

No.	Item	Symptom	Condition	Diagnostic Item	Reference
4	Slips/Will Not Engage	Vehicle cannot be started from “D” position.	ON vehicle	1. CVT fluid level and state	TM-304
				2. CVT position	TM-314
				3. CAN communication line	TM-208
				4. Line pressure test	TM-308
				5. Stall test	TM-306
				6. Step motor	TM-261
				7. Primary speed sensor	TM-218
				8. Secondary speed sensor	TM-222
				9. Accelerator pedal position sensor	TM-252
				10. CVT fluid temperature sensor	TM-216
				11. Secondary pressure sensor	TM-242
				12. Power supply	TM-249
			OFF vehicle	13. Oil pump assembly	TM-332
				14. Forward clutch	
				15. Control valve	
				16. Parking components	
5		Vehicle cannot be started from “R” position.	ON vehicle	1. CVT fluid level and state	TM-304
				2. CVT position	TM-314
				3. CAN communication line	TM-208
				4. Line pressure test	TM-308
				5. Stall test	TM-306
				6. Step motor	TM-261
				7. Primary speed sensor	TM-218
				8. Secondary speed sensor	TM-222
				9. Accelerator pedal position sensor	TM-252
				10. CVT fluid temperature sensor	TM-216
				11. Secondary pressure sensor	TM-242
				12. Power supply	TM-249
			OFF vehicle	13. Oil pump assembly	TM-332
				14. Reverse brake	
				15. Control valve	
				16. Parking components	

No.	Item	Symptom	Condition	Diagnostic Item	Reference
6	Slips/Will Not Engage	Does not lock-up.	ON vehicle	1. CVT fluid level and state	TM-304
				2. Line pressure test	TM-308
				3. Engine speed signal	TM-226
				4. Primary speed sensor	TM-218
				5. Torque converter clutch solenoid valve	TM-230
				6. CAN communication line	TM-208
				7. Stall test	TM-306
				8. Step motor	TM-261
				9. PNP switch	TM-213
				10. Lock-up select solenoid valve	TM-258
				11. CVT fluid temperature sensor	TM-216
				12. Secondary speed sensor	TM-222
				13. Secondary pressure sensor	TM-242
			OFF vehicle	14. Torque converter	TM-335
				15. Oil pump assembly	TM-332
				16. Control valve	
7		Does not hold lock-up condition.	ON vehicle	1. CVT fluid level and state	TM-304
				2. Line pressure test	TM-308
				3. Engine speed signal	TM-226
				4. Primary speed sensor	TM-218
				5. Torque converter clutch solenoid valve	TM-230
				6. CAN communication line	TM-208
				7. Stall test	TM-306
				8. Step motor	TM-261
				9. PNP switch	TM-213
				10. Lock-up select solenoid valve	TM-258
				11. CVT fluid temperature sensor	TM-216
				12. Secondary speed sensor	TM-222
				13. Secondary pressure sensor	TM-242
			OFF vehicle	14. Torque converter	TM-335
				15. Oil pump assembly	TM-332
				16. Control valve	

No.	Item	Symptom	Condition	Diagnostic Item	Reference
8	Slips/Will Not Engage	Lock-up is not released.	ON vehicle	1. CVT fluid level and state	TM-304
				2. Line pressure test	TM-308
				3. Engine speed signal	TM-226
				4. Primary speed sensor	TM-218
				5. Torque converter clutch solenoid valve	TM-230
				6. CAN communication line	TM-208
				7. Stall test	TM-306
			OFF vehicle	8. Torque converter	TM-335
				9. Oil pump assembly	TM-332
				10. Control valve	
9		With selector lever in “D” position, acceleration is extremely poor.	ON vehicle	1. CVT fluid level and state	TM-304
				2. Line pressure test	TM-308
				3. Stall test	TM-306
				4. Accelerator pedal position sensor	TM-252
				5. CAN communication line	TM-208
				6. PNP switch	TM-213
				7. CVT position	TM-314
				8. Step motor	TM-261
				9. Primary speed sensor	TM-218
				10. Secondary speed sensor	TM-222
				11. Accelerator pedal position sensor	TM-252
				12. Secondary pressure sensor	TM-242
				13. CVT fluid temperature sensor	TM-216
				14. Power supply	TM-249
			OFF vehicle	15. Torque converter	TM-335
				16. Oil pump assembly	TM-332
				17. Forward clutch	
				18. Control valve	

No.	Item	Symptom	Condition	Diagnostic Item	Reference
10	Slips/Will Not Engage	With selector lever in “R” position, acceleration is extremely poor.	ON vehicle	1. CVT fluid level and state	TM-304
				2. Line pressure test	TM-308
				3. Stall test	TM-306
				4. Accelerator pedal position sensor	TM-252
				5. CAN communication line	TM-208
				6. PNP switch	TM-213
				7. CVT position	TM-314
				8. Step motor	TM-261
				9. Primary speed sensor	TM-218
				10. Secondary speed sensor	TM-222
				11. Accelerator pedal position sensor	TM-252
				12. Secondary pressure sensor	TM-242
				13. CVT fluid temperature sensor	TM-216
				14. Power supply	TM-249
			OFF vehicle	15. Torque converter	TM-335
				16. Oil pump assembly	TM-332
				17. Reverse brake	
				18. Control valve	
11		Slips at lock-up.	ON vehicle	1. CVT fluid level and state	TM-304
				2. Line pressure test	TM-308
				3. Engine speed signal	TM-226
				4. Primary speed sensor	TM-218
				5. Torque converter clutch solenoid valve	TM-230
				6. CAN communication line	TM-208
				7. Stall test	TM-306
				8. Step motor	TM-261
				9. PNP switch	TM-213
				10. Lock-up select solenoid valve	TM-258
				11. CVT fluid temperature sensor	TM-216
				12. Secondary speed sensor	TM-222
				13. Secondary pressure sensor	TM-242
			OFF vehicle	14. Torque converter	TM-335
				15. Oil pump assembly	TM-332
				16. Control valve	

No.	Item	Symptom	Condition	Diagnostic Item	Reference
12	Others	No creep at all.	ON vehicle	1. CVT fluid level and state	TM-304
				2. Line pressure test	TM-308
				3. Accelerator pedal position sensor	TM-252
				4. PNP switch	TM-213
				5. CAN communication line	TM-208
				6. Stall test	TM-306
				7. CVT position	TM-314
				8. Step motor	TM-261
				9. Primary speed sensor	TM-218
				10. Secondary speed sensor	TM-222
				11. Accelerator pedal position sensor	TM-252
				12. CVT fluid temperature sensor	TM-216
				13. Secondary pressure sensor	TM-242
				14. Power supply	TM-249
			OFF vehicle	15. Torque converter	TM-335
				16. Oil pump assembly	TM-332
				17. Gear system	
				18. Forward clutch	
				19. Reverse brake	
				20. Control valve	
13		Vehicle cannot run in all positions.	ON vehicle	1. CVT fluid level and state	TM-304
				2. Line pressure test	TM-308
				3. PNP switch	TM-213
				4. Stall test	TM-306
				5. CVT position	TM-314
				6. Step motor	TM-261
				7. Primary speed sensor	TM-218
				8. Secondary speed sensor	TM-222
				9. Accelerator pedal position sensor	TM-252
				10. CVT fluid temperature sensor	TM-216
				11. Secondary pressure sensor	TM-242
				12. Power supply	TM-249
			OFF vehicle	13. Torque converter	TM-335
				14. Oil pump assembly	TM-332
				15. Gear system	
				16. Forward clutch	
				17. Reverse brake	
				18. Control valve	
				19. Parking components	

No.	Item	Symptom	Condition	Diagnostic Item	Reference
14	Others	With selector lever in “D” position, driving is not possible.	ON vehicle	1. CVT fluid level and state	TM-304
				2. Line pressure test	TM-308
				3. PNP switch	TM-213
				4. Stall test	TM-306
				5. CVT position	TM-314
				6. Step motor	TM-261
				7. Primary speed sensor	TM-218
				8. Secondary speed sensor	TM-222
				9. Accelerator pedal position sensor	TM-252
				10. CVT fluid temperature sensor	TM-216
				11. Secondary pressure sensor	TM-242
				12. Power supply	TM-249
			OFF vehicle	13. Torque converter	TM-335
				14. Oil pump assembly	TM-332
				15. Gear system	
				16. Forward clutch	
				17. Control valve	
				18. Parking components	
15		With selector lever in “R” position, driving is not possible.	ON vehicle	1. CVT fluid level and state	TM-304
				2. Line pressure test	TM-308
				3. PNP switch	TM-213
				4. Stall test	TM-306
				5. CVT position	TM-314
				6. Step motor	TM-261
				7. Primary speed sensor	TM-218
				8. Secondary speed sensor	TM-222
				9. Accelerator pedal position sensor	TM-252
				10. CVT fluid temperature sensor	TM-216
				11. Secondary pressure sensor	TM-242
				12. Power supply	TM-249
			OFF vehicle	13. Torque converter	TM-335
				14. Oil pump assembly	TM-332
				15. Gear system	
				16. Reverse brake	
				17. Control valve	
				18. Parking components	

No.	Item	Symptom	Condition	Diagnostic Item	Reference
16	Others	Judder occurs during lock-up.	ON vehicle	1. CVT fluid level and state	TM-304
				2. Engine speed signal	TM-226
				3. Primary speed sensor	TM-218
				4. Secondary speed sensor	TM-222
				5. Accelerator pedal position sensor	TM-252
				6. CAN communication line	TM-208
				7. Torque converter clutch solenoid valve	TM-230
			OFF vehicle	8. Torque converter	TM-335
				9. Control valve	TM-332
17		Strange noise in “D” position.	ON vehicle	1. CVT fluid level and state	TM-304
				2. Engine speed signal	TM-226
				3. CAN communication line	TM-208
			OFF vehicle	4. Torque converter	TM-335
				5. Oil pump assembly	TM-332
				6. Gear system	
				7. Forward clutch	
				8. Control valve	
				9. Bearing	
18		Strange noise in “R” position.	ON vehicle	1. CVT fluid level and state	TM-304
				2. Engine speed signal	TM-226
				3. CAN communication line	TM-208
			OFF vehicle	4. Torque converter	TM-335
				5. Oil pump assembly	TM-332
				6. Gear system	
				7. Reverse brake	
				8. Control valve	
19		Strange noise in “N” position.	ON vehicle	1. CVT fluid level and state	TM-304
				2. Engine speed signal	TM-226
				3. CAN communication line	TM-208
			OFF vehicle	4. Torque converter	TM-335
				5. Oil pump assembly	TM-332
				6. Gear system	
				7. Control valve	

No.	Item	Symptom	Condition	Diagnostic Item	Reference
20	Others	Vehicle does not decelerate by engine brake.	ON vehicle	1. CVT fluid level and state	TM-304
				2. CVT position	TM-314
				3. CAN communication line	TM-208
				4. Step motor	TM-261
				5. Primary speed sensor	TM-218
				6. Secondary speed sensor	TM-222
				7. Line pressure test	TM-308
				8. Engine speed signal	TM-226
				9. Accelerator pedal position sensor	TM-252
			OFF vehicle	10. Control valve	TM-332
21		Maximum speed low.	ON vehicle	1. CVT fluid level and state	TM-304
				2. Line pressure test	TM-308
				3. Accelerator pedal position sensor	TM-252
				4. CAN communication line	TM-208
				5. Stall test	TM-306
				6. Step motor	TM-261
				7. Primary speed sensor	TM-218
				8. Secondary speed sensor	TM-222
				9. Secondary pressure sensor	TM-242
				10. CVT fluid temperature sensor	TM-216
			OFF vehicle	11. Torque converter	TM-335
				12. Oil pump assembly	TM-332
				13. Gear system	
				14. Forward clutch	
				15. Control valve	
22		With selector lever in “P” position, vehicle does not enter parking condition or, with selector lever in another position, parking condition is not cancelled.	ON vehicle	1. PNP switch	TM-213
				2. CVT position	TM-314
			OFF vehicle	3. Parking components	TM-332
23		Vehicle runs with CVT in “P” position.	ON vehicle	1. PNP switch	TM-213
				2. CVT fluid level and state	TM-304
				3. CVT position	TM-314
			OFF vehicle	4. Parking components	TM-332
				5. Gear system	
				6. Control valve	

No.	Item	Symptom	Condition	Diagnostic Item	Reference
24	Others	Vehicle runs with CVT in “N” position.	ON vehicle	1. PNP switch	TM-213
				2. CVT fluid level and state	TM-304
				3. CVT position	TM-314
			OFF vehicle	4. Gear system	TM-332
				5. Forward clutch	
				6. Reverse brake	
				7. Control valve	
25		Engine stall.	ON vehicle	1. CVT fluid level and state	TM-304
				2. Engine speed signal	TM-226
				3. Primary speed sensor	TM-218
				4. Torque converter clutch solenoid valve	TM-230
				5. CAN communication line	TM-208
				6. Stall test	TM-306
				7. Secondary pressure sensor	TM-242
			OFF vehicle	8. Torque converter	TM-335
				9. Control valve	TM-332
26		Engine stalls when selector lever is shifted “N”→“D” or “R”.	ON vehicle	1. CVT fluid level and state	TM-304
				2. Engine speed signal	TM-226
				3. Primary speed sensor	TM-218
				4. Torque converter clutch solenoid valve	TM-230
				5. CAN communication line	TM-208
				6. Stall test	TM-306
			OFF vehicle	7. Torque converter	TM-335
				8. Control valve	TM-332
27		Engine speed does not return to idle.	ON vehicle	1. CVT fluid level and state	TM-304
				2. Accelerator pedal position sensor	TM-252
				3. Secondary speed sensor	TM-222
				4. CAN communication line	TM-208
			OFF vehicle	5. Control valve	TM-332
28		CVT does not shift.	ON vehicle	1. CVT fluid level and state	TM-304
				2. CVT position	TM-314
				3. Line pressure test	TM-308
				4. Engine speed signal	TM-226
				5. Accelerator pedal position sensor	TM-252
				6. CAN communication line	TM-208
				7. Primary speed sensor	TM-218
				8. Secondary speed sensor	TM-222
				9. Step motor	TM-261
			OFF vehicle	10. Control valve	TM-332
				11. Oil pump assembly	
29		Engine does not start in “N” or “P” position.	ON vehicle	1. Ignition switch and starter	PG-55, STR-10
				2. CVT position	TM-314
				3. PNP switch	TM-213

No.	Item	Symptom	Condition	Diagnostic Item	Reference
30	Others	Engine starts in positions other than “N” or “P”.	ON vehicle	1. Ignition switch and starter	PG-55, STR-10
				2. CVT position	TM-314
				3. PNP switch	TM-213
31		When brake pedal is depressed with ignition switch ON, selector lever cannot be shifted from “P” position to other position.	ON vehicle	1. Stop lamp switch	TM-267
				2. Shift lock solenoid	
				3. Control device	
32		When brake pedal is not depressed with ignition switch ON, selector lever can be shifted from “P” position to other position.	ON vehicle	1. Stop lamp switch	TM-267
				2. Shift lock solenoid	
				3. Control device	
33		Cannot be changed to sport mode.	ON vehicle	1. Sport mode switch	TM-272
				2. CAN communication line	TM-208
				3. Combination meters	MWI-42
33		CVT indicator lamp is not turned ON.	ON vehicle	1. CAN communication line	TM-208
				2. Combination meters	MWI-42
				3. TCM power supply and ground	TM-249

PRECAUTION

PRECAUTIONS

Precaution for Supplemental Restraint System (SRS) "AIR BAG" and "SEAT BELT PRE-TENSIONER"

INFOID:0000000003901473

The Supplemental Restraint System such as “AIR BAG” and “SEAT BELT PRE-TENSIONER”, used along with a front seat belt, helps to reduce the risk or severity of injury to the driver and front passenger for certain types of collision. Information necessary to service the system safely is included in the “SRS AIRBAG” and “SEAT BELT” of this Service Manual.

WARNING:

- **To avoid rendering the SRS inoperative, which could increase the risk of personal injury or death in the event of a collision which would result in air bag inflation, all maintenance must be performed by an authorized NISSAN/INFINITI dealer.**
- **Improper maintenance, including incorrect removal and installation of the SRS, can lead to personal injury caused by unintentional activation of the system. For removal of Spiral Cable and Air Bag Module, see the “SRS AIRBAG”.**
- **Never use electrical test equipment on any circuit related to the SRS unless instructed to in this Service Manual. SRS wiring harnesses can be identified by yellow and/or orange harnesses or harness connectors.**

Precaution Necessary for Steering Wheel Rotation after Battery Disconnect

INFOID:0000000003901477

NOTE:

- Before removing and installing any control units, first turn the push-button ignition switch to the LOCK position, then disconnect both battery cables.
- After finishing work, confirm that all control unit connectors are connected properly, then re-connect both battery cables.
- Always use CONSULT-III to perform self-diagnosis as a part of each function inspection after finishing work. If a DTC is detected, perform trouble diagnosis according to self-diagnosis results.

This vehicle is equipped with a push-button ignition switch and a steering lock unit.
If the battery is disconnected or discharged, the steering wheel will lock and cannot be turned.
If turning the steering wheel is required with the battery disconnected or discharged, follow the procedure below before starting the repair operation.

OPERATION PROCEDURE

1. Connect both battery cables.
   NOTE:
   Supply power using jumper cables if battery is discharged.
2. Turn the push-button ignition switch to ACC position.
   (At this time, the steering lock will be released.)
3. Disconnect both battery cables. The steering lock will remain released with both battery cables disconnected and the steering wheel can be turned.
4. Perform the necessary repair operation.
5. When the repair work is completed, re-connect both battery cables. With the brake pedal released, turn the push-button ignition switch from ACC position to ON position, then to LOCK position. (The steering wheel will lock when the push-button ignition switch is turned to LOCK position.)
6. Perform self-diagnosis check of all control units using CONSULT-III.

Precaution for Procedure without Cowl Top Cover

INFOID:0000000003901480

When performing the procedure after removing cowl top cover, cover the lower end of windshield with urethane, etc.

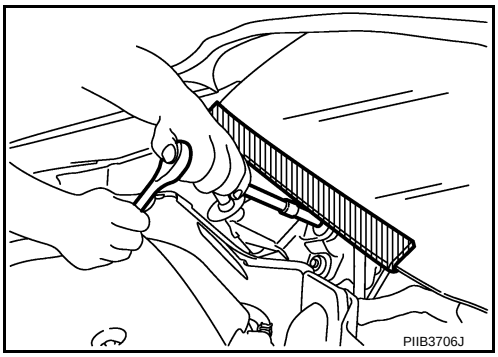

Precaution for On Board Diagnosis (OBD) System of CVT and Engine

INFOID:0000000003806496

The ECM has an on board diagnostic system. It will light up the Malfunction Indicator Lamp (MIL) to warn the driver of a malfunction causing emission deterioration.

CAUTION:

- **Be sure to turn the ignition switch OFF and disconnect the battery cable from the negative terminal before any repair or inspection work. The open/short circuit of related switches, sensors, solenoid valves, etc. will cause the MIL to light up.**
- **Be sure to connect and lock the connectors securely after work. A loose (unlocked) connector will cause the MIL to light up due to an open circuit. (Be sure the connector is free from water, grease, dirt, bent terminals, etc.)**
- **Be sure to route and secure the harnesses properly after work. Interference of the harness with a bracket, etc. may cause the MIL to light up due to a short circuit.**
- **Be sure to connect rubber tubes properly after work. A misconnected or disconnected rubber tube may cause the MIL to light up due to a malfunction of the EVAP system or fuel injection system, etc.**
- **Be sure to erase the unnecessary malfunction information (repairs completed) from the TCM and ECM before returning the vehicle to the customer.**

Precaution for TCM and CVT Assembly Replacement

INFOID:0000000003806497

CAUTION:

- **Check if new data (Unit ID) are entered correctly after replacing CVT assembly and erasing data in TCM. (Connect CONSULT-III, and then turn ignition switch OFF.)**
- **When replacing CVT assembly or TCM, refer to the pattern table below and erase the EEPROM in the TCM if necessary.**

EEPROM ERASING PATTERNS

CVT assembly	TCM	Erasing EEPROM in TCM	Remarks
Replaced	Replaced	Not required	Not required because the EEPROM in the TCM is in the default state. (CVT assembly must be replaced first.)
Not replaced	Replaced	Not required	Not required because the EEPROM in the TCM is in the default state.
Replaced	Not replaced	Required	Required because data has been written in the EEPROM in the TCM and because the TCM cannot write data from the ROM assembly in the transmission.

Removal and Installation Procedure for CVT Unit Connector

INFOID:0000000003806498

REMOVAL

Rotate bayonet ring (1) counterclockwise. Pull out CVT unit harness connector (2) upward and remove it.

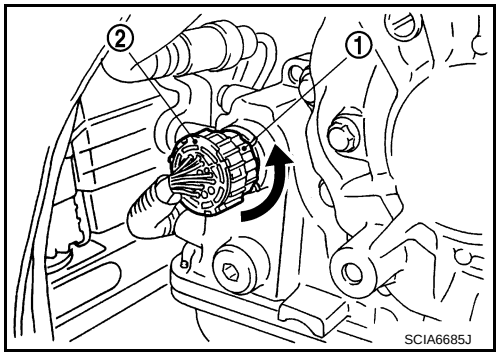

INSTALLATION

1. Align Δ marking on CVT unit harness connector terminal body with o marking on bayonet ring. Insert CVT unit harness connector. Then rotate bayonet ring clockwise.

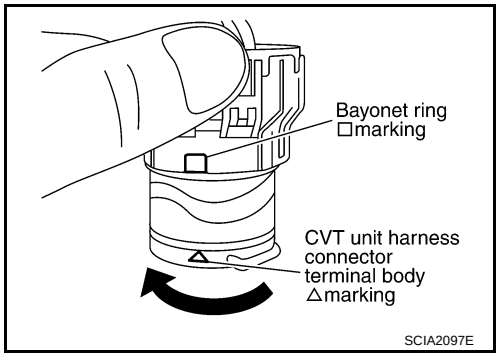

2. Rotate bayonet ring clockwise until Δ marking on CVT unit harness connector terminal body is aligned with the slit on bayonet ring as shown in the figure (correctly fitting condition). Install CVT unit harness connector to CVT unit harness connector terminal body.

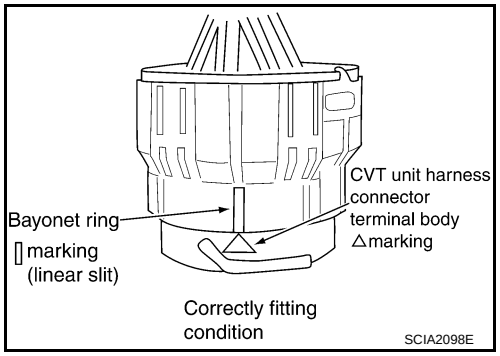

CAUTION:
- **Securely align Δ marking on CVT unit harness connector terminal body with bayonet ring slit. Then, be careful not to make a half fit condition as shown in the figure.**
- **Never mistake the slit of bayonet ring for other dent portion.**

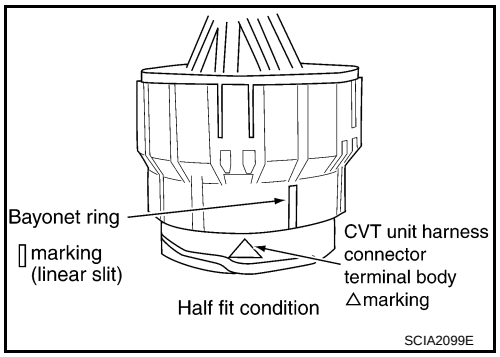

Precaution

INFOID:0000000003806499

NOTE:
If any malfunction occurs in the RE0F10A model transaxle, replace the entire transaxle assembly.

- **Turn ignition switch OFF and disconnect negative battery cable before connecting or disconnecting the TCM harness connector. Because battery voltage is applied to TCM even if ignition switch is turned OFF.**

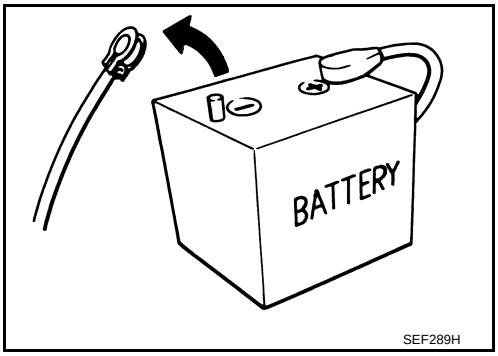

- **When connecting or disconnecting pin connectors into or from TCM, do not damage pin terminals (bend or break).**
  Check that there are not any bends or breaks on TCM pin terminal, when connecting pin connectors.

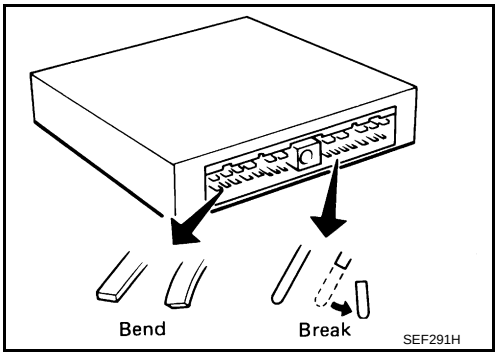

- **Perform TCM input/output signal inspection and check whether TCM functions normally or not before replacing TCM. Refer to TM-275, "Reference Value".**

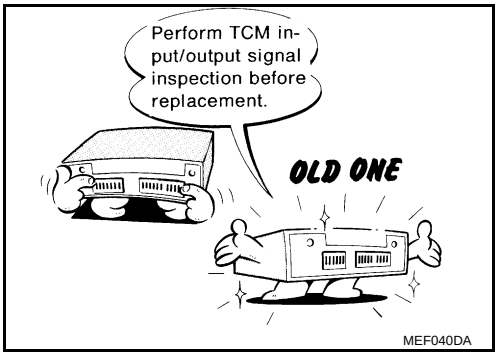

- **Perform "DTC Confirmation Procedure" after performing each TROUBLE DIAGNOSIS.**
  If the repair is completed the DTC should not be displayed in the "DTC Confirmation Procedure".
- Always use the specified brand of CVT fluid. Refer to MA-11, "Fluids and Lubricants".
- Use lint-free paper, not cloth rags, during work.
- Dispose of the waste oil using the methods prescribed by law, ordinance, etc. after replacing the CVT fluid.

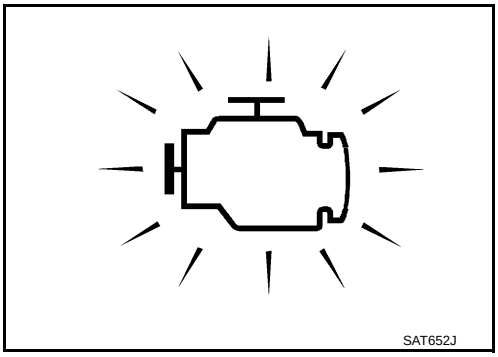

Service Notice or Precaution

INFOID:0000000003806500

OBD SELF-DIAGNOSIS

- CVT self-diagnosis is performed by the TCM in combination with the ECM. The results can be read through the blinking pattern of the Malfunction Indicator (MI). Refer to the table on TM-204, "CONSULT-III Function (TRANSMISSION)" for the indicator used to display each self-diagnostic result.
- The self-diagnostic results indicated by the MI are automatically stored in both the ECM and TCM memories. **Always perform the procedure on TM-202, "Diagnosis Description" to complete the repair and avoid unnecessary blinking of the MIL.**

For details of OBD, refer to EC-102, "Diagnosis Description".

- **Certain systems and components, especially those related to OBD, may use the new style slide-locking type harness connector. For description and how to disconnect, refer to PG-96.**

ATFTEMP COUNT Conversion Table

INFOID:0000000003806501

ATFTEMP COUNT	Temperature °C (°F)	ATFTEMP COUNT	Temperature °C (°F)
4	–30 (–22)	177	90 (194)
8	–20 (–4)	183	95 (203)
13	–10 (14)	190	100 (212)
17	–5 (23)	196	105 (221)
21	0 (32)	201	110 (230)
27	5 (41)	206	115 (239)
32	10 (50)	210	120 (248)
39	15 (59)	214	125 (257)
47	20 (68)	218	130 (266)
55	25 (77)	221	135 (275)
64	30 (86)	224	140 (284)
73	35 (95)	227	145 (293)
83	40 (104)	229	150 (302)
93	45 (113)	231	155 (311)
104	50 (122)	233	160 (320)
114	55 (131)	235	165 (329)
124	60 (140)	236	170 (338)
134	65 (149)	238	175 (347)
143	70 (158)	239	180 (356)
152	75 (167)	241	190 (374)
161	80 (176)	243	200 (392)
169	85 (185)	—	—

PREPARATION

PREPARATION

Special Service Tools

INFOID:0000000003806502

Tool number Tool name	Description
1. ST25054000 Adapter 2. ST25055000 Adapter 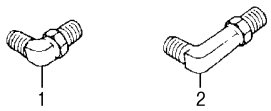 SCIA8372J	Measuring line pressure
KV31103600 Joint pipe adapter (With ST25054000) 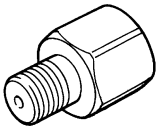 ZZA1227D	Measuring line pressure

Commercial Service Tools

INFOID:0000000003806503

Tool number Tool name	Description
Power tool 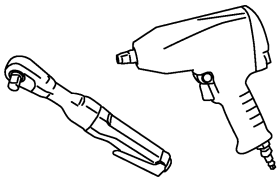 PBIC0190E	Loosening nuts and bolts
Oil pressure gauge set 1. Oil pressure gauge 2. Hose 3. Joint pipe 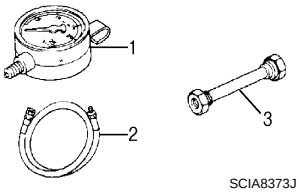 SCIA8373J	Measuring line pressure

Tool number Tool name		Description
Drift a: 54 mm (2.13 in) dia. b: 47 mm (1.85 in) dia.	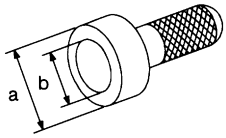 NT115	Installing differential side oil seal
Drift a: 65 mm (2.56 in) dia. b: 60 mm (2.36 in) dia.	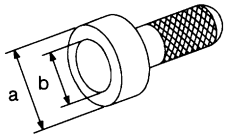 NT115	Installing converter housing oil seal

ON-VEHICLE MAINTENANCE

CVT FLUID

Inspection

INFOID:0000000003806504

CHECKING CVT FLUID

The fluid level should be checked with the fluid warmed up to 50 to 80°C (122 to 176°F). The fluid level check procedure is as follows:

1. Check for fluid leakage.
2. With the engine warmed up, drive the vehicle in an urban area. When ambient temperature is 20°C (68°F), it takes about 10 minutes for the CVT fluid to warm up to 50 to 80°C (122 to 176°F).
3. Park the vehicle on a level surface.
4. Apply parking brake firmly.
5. With engine at idle, while depressing brake pedal, move shift selector throughout the entire shift range.

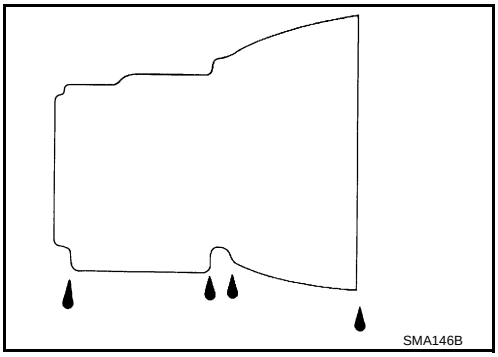

6. Pull out the CVT fluid level gauge from the CVT fluid charging pipe after pressing the tab on the CVT fluid level gauge to release the lock.

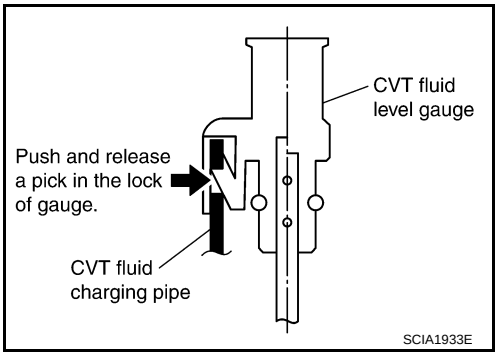

7. Wipe fluid off the CVT fluid level gauge. Insert the CVT fluid level gauge rotating 180° from the originally installed position, then securely push the CVT fluid level gauge until it meets the top end of the CVT fluid charging pipe.
   CAUTION:
   When wiping away the CVT fluid level gauge, always use lint-free paper, not a cloth rag.

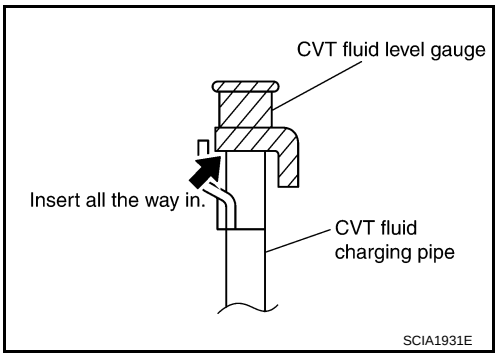

8. Place the selector lever in “P” or “N” and check that the fluid level is within the specified range.
   CAUTION:
   When reinstalling CVT fluid level gauge, insert it into the CVT fluid charging pipe and rotate it to the original installation position until securely locked.

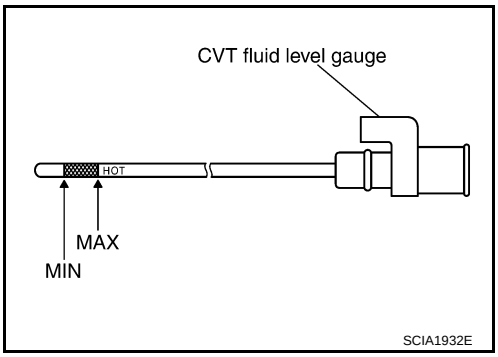

CVT FLUID CONDITION

Check CVT fluid condition.
- If CVT fluid is very dark or smells burned, check operation of CVT. Flush cooling system after repair of CVT.
- If CVT fluid contains frictional material (clutches, brakes, etc.), replace radiator and flush cooler line using cleaning solvent and compressed air after repair of CVT. Refer to CO-13, "Exploded View".

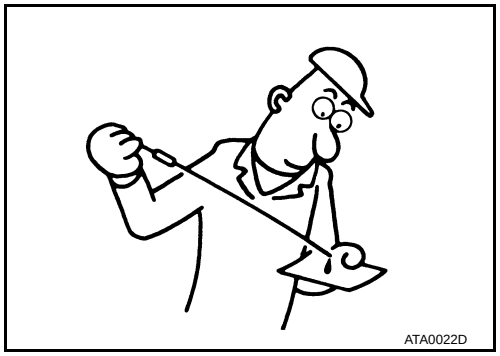

Fluid status	Conceivable cause	Required operation
Varnished (viscous varnish state)	CVT fluid become degraded due to high temperatures.	Replace the CVT fluid and check the CVT main unit and the vehicle for malfunctions (wire harnesses, cooler pipes, etc.)
Milky white or cloudy	Water in the fluid	Replace the CVT fluid and check for places where water is getting in.
Large amount of metal powder mixed in	Unusual wear of sliding parts within CVT	Replace the CVT fluid and check for improper operation of the CVT.

Changing

INFOID:0000000003806505

CAUTION:
Replace O-ring with new ones at the final stage of the operation when installing.

1. Remove drain plug from oil pan.
2. Remove drain plug gasket from drain plug.
3. Install drain plug gasket to drain plug.
   CAUTION:
   Never reuse drain plug gasket.
4. Install drain plug to oil pan. Refer to TM-321, "Exploded View".
5. Fill CVT fluid from CVT fluid charging pipe to the specified level.

CVT fluid	**: Refer to TM-337, "General Specification".**
Fluid capacity	**: Refer to TM-337, "General Specification".**

   CAUTION:
   - **Use only Genuine NISSAN CVT Fluid NS-2. Never mix with other fluid.**
   - **Using CVT fluid other than Genuine NISSAN CVT Fluid NS-2 will deteriorate in driveability and CVT durability, and may damage the CVT, which is not covered by the warranty.**
   - **When filling CVT fluid, take care not to scatter heat generating parts such as exhaust.**
   - **Sufficiently shake the container of CVT fluid before using.**
   - **Delete CVT fluid deterioration date with CONSULT-III after changing CVT fluid.**
6. With the engine warmed up, drive the vehicle in an urban area.
   NOTE:
   When ambient temperature is 20°C (68°F), it takes about 10 minutes for the CVT fluid to warm up to 50 to 80°C (122 to 176°F).
7. Check CVT fluid level and condition.
8. Repeat steps 1 to 5 if CVT fluid has been contaminated.

STALL TEST

Inspection and Judgment

INFOID:0000000003806506

INSPECTION

1. Inspect the amount of engine oil. Replenish the engine oil if necessary.
2. Drive for about 10 minutes to warm up the vehicle so that the CVT fluid temperature is 50 to 80°C (122 to 176°F). Inspect the amount of CVT fluid. Replenish if necessary.

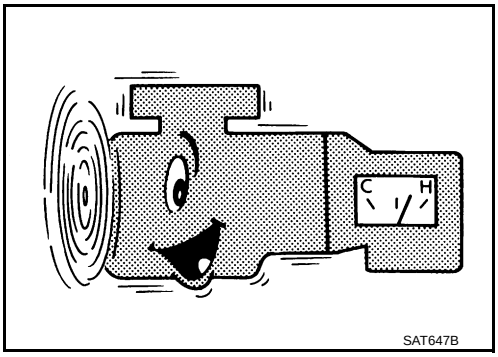

3. Securely engage the parking brake so that the tires do not turn.
4. Install a tachometer where it can be seen by driver during test.
   NOTE:
   It is good practice to mark the point of specified engine rpm on indicator.
5. Start engine, apply foot brake, and place selector lever in “D” position.

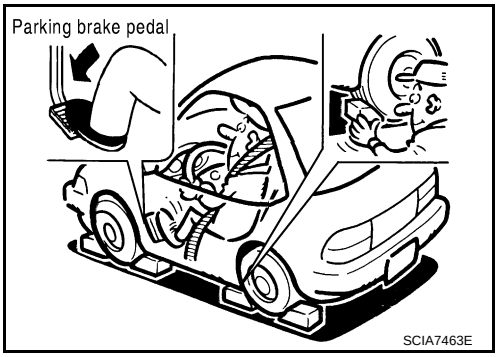

6. While holding down the foot brake, gradually press down the accelerator pedal.
7. Quickly read off the stall speed, and then quickly remove your foot from the accelerator pedal.
   CAUTION:
   Never hold down the accelerator pedal for more than 5 seconds during this test.

   Stall speed : Refer to TM-337, "Stall Speed".

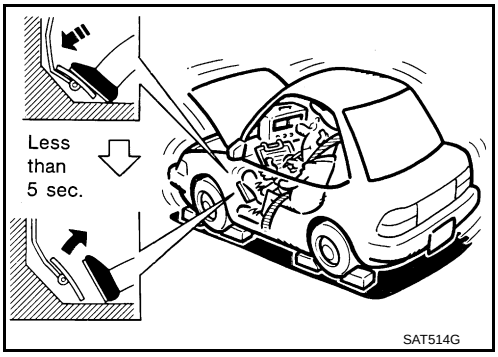

8. Move the selector lever to the “N” position.
9. Cool down the CVT fluid.
   CAUTION:
   Run the engine at idle for at least 1 minute.
10. Repeat steps 6 through 9 with selector lever in “R” position.

JUDGMENT

	Selector lever position		Expected problem location
	“D”	“R”	
Stall rotation	H	O	• Forward clutch
	O	H	• Reverse brake
	L	L	• Engine and torque converter one-way clutch
	H	H	• Line pressure low • Primary pulley • Secondary pulley • Steel belt

O: Stall speed within standard value position.
H: Stall speed is higher than standard value.
L: Stall speed is lower than standard value.

LINE PRESSURE TEST

Inspection and Judgment

INFOID:0000000003806507

INSPECTION

Line Pressure Test Procedure

1. Inspect the amount of engine oil and replenish if necessary.
2. Drive the car for about 10 minutes to warm it up so that the CVT fluid reaches in the range of 50 to 80°C (122 to 176°F), then inspect the amount of CVT fluid and replenish if necessary.
   NOTE:
   The CVT fluid temperature rises in the range of 50 to 80°C (122 to 176°F) during 10 minutes of driving.
3. After warming up CVT, remove the oil pressure detection plug and install the joint pipe adapter (SST: KV31103600), adapter (SST: 25055000), oil pressure gauge set (commercial service tool).
   CAUTION:
   When using the oil pressure gauge, be sure to use the O-ring attached to the oil pressure detection plug.

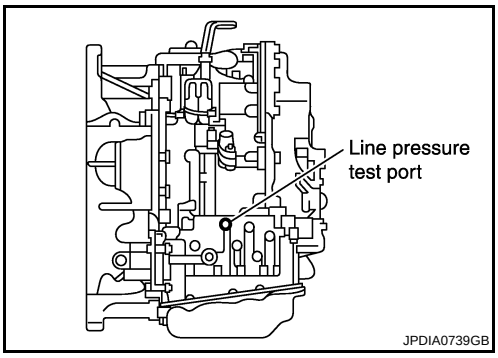

4. Securely engage the parking brake so that the tires do not turn.

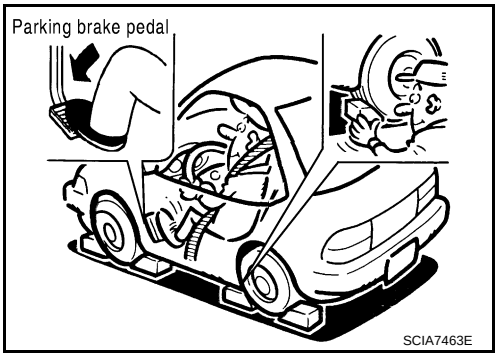

5. Start the engine, and then measure the line pressure at both idle and the stall speed.
   CAUTION:
   - **Keep the brake pedal pressed all the way down during measurement.**
   - **When measuring the line pressure at the stall speed, refer to TM-306, "Inspection and Judgment".**

   Line pressure : Refer to TM-337, "Line Pressure".

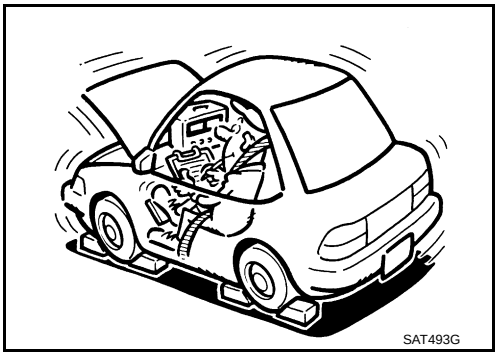

6. After the measurements are complete, install the oil pressure detection plug and tighten to the specified torque below.

   : 7.5 N·m (0.77 kg-m, 66 in-lb)

   CAUTION:
   - **Never reuse O-ring.**
   - **Apply CVT fluid to O-ring.**

JUDGMENT

Judgment		Possible cause
Idle speed	Low for all positions (“P”, “R”, “N”, “D”, “L”)	Possible causes include malfunctions in the pressure supply system and low oil pump output. For example • Oil pump wear • Pressure regulator valve or plug sticking or spring fatigue • Oil strainer ⇒ oil pump ⇒ pressure regulator valve passage oil leak • Engine idle speed too low
	Only low for a specific position	Possible causes include an oil pressure leak in a passage or device related to the position after the pressure is distributed by the manual valve.
	High	Possible causes include a sensor malfunction or malfunction in the line pressure adjustment function. For example • Accelerator pedal position signal malfunction • CVT fluid temperature sensor malfunction • Pressure control solenoid A (line pressure solenoid) malfunction (sticking in OFF state, filter clog, cut line) • Pressure regulator valve or plug sticking
Stall speed	Line pressure does not rise higher than the line pressure for idle.	Possible causes include a sensor malfunction or malfunction in the pressure adjustment function. For example • Accelerator pedal position signal malfunction • TCM malfunction • Pressure control solenoid A (line pressure solenoid) malfunction (shorting, sticking in ON state) • Pressure regulator valve or plug sticking
	The pressure rises, but does not enter the standard position.	Possible causes include malfunctions in the pressure supply system and malfunction in the pressure adjustment function. For example • Accelerator pedal position signal malfunction • Pressure control solenoid A (line pressure solenoid) malfunction (sticking, filter clog) • Pressure regulator valve or plug sticking
	Only low for a specific position	Possible causes include an oil pressure leak in a passage or device related to the position after the pressure is distributed by the manual valve.

ROAD TEST

Description

INFOID:0000000003806508

DESCRIPTION

- The purpose of the test is to determine the overall performance of CVT and analyze causes of problems.
- The road test consists of the following three parts:

1. “Check Before Engine Is Started” TM-310.
2. “Check at Idle” TM-311.
3. “Cruise Test” TM-312.

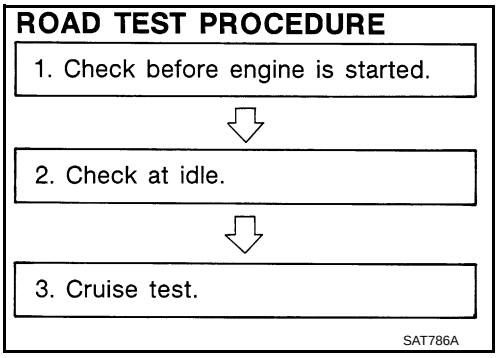

- Before the road test, familiarize yourself with all test procedures and items to check.
- Perform tests for all the check items until a malfunction phenomenon is detected. Perform diagnosis for NG items after the completion of road tests.

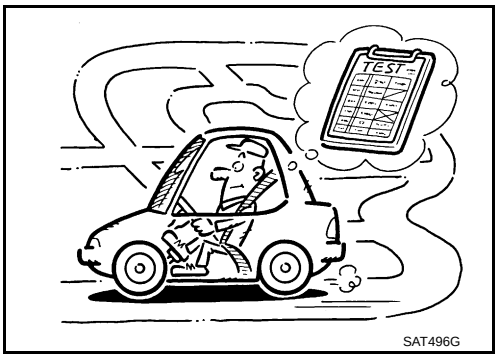

CONSULT-III SETTING PROCEDURE

- Using CONSULT-III, perform a cruise test and record the result.
- Print the result and ensure that shifts and lock-ups take place as per Shift Schedule.

1. Touch “Data Monitor” on “Direct Diagnostic Mode” screen.
2. Touch “MAIN SIGNALS” to set recording condition.
3. See “Numerical Display”, “Barchart Display” or “Line Graph Display”.
4. Touch “START”.
5. When performing cruise test. Refer to TM-312, "Cruise Test".
6. After finishing cruise test part, touch “RECORD”.
7. Touch “STORE”.
8. Touch “BACK”.
9. Touch “DISPLAY”.
10. Touch “PRINT”.
11. Check the monitor data printed out.

Check before Engine Is Started

INFOID:0000000003806509

1. CHECK SHIFT POSITION INDICATOR

1. Park vehicle on flat surface.
2. Move selector lever to “P” position.
3. Turn ignition switch OFF. Wait at least 5 seconds.
4. Turn ignition switch ON. (Never start engine.)

Has shift position indicator been turned ON for about 2 seconds?

YES >> 1. Turn ignition switch OFF.
2. Perform self-diagnosis and note NG items.
Refer to TM-204, "CONSULT-III Function (TRANSMISSION)".
3. Go to TM-311, "Check at Idle".

NO >> Stop “Road Test”. Refer to TM-286, "Symptom Table".

Check at Idle

INFOID:0000000003806510

1. CHECK STARTING THE ENGINE

1. Park vehicle on flat surface.
2. Move selector lever to “P” or “N” position.
3. Turn ignition switch OFF.
4. Turn ignition switch to “START” position.

Is engine started?

YES >> GO TO 2.
NO >> Stop “Road Test”. Refer to TM-286, "Symptom Table".

2. CHECK STARTING THE ENGINE

1. Turn ignition switch ON.
2. Move selector lever to “D”, “L” or “R” position.
3. Turn ignition switch to “START” position.

Is engine started?

YES >> Stop “Road Test”. Refer to TM-286, "Symptom Table".
NO >> GO TO 3.

3. CHECK “P” POSITION FUNCTION

1. Move selector lever to “P” position.
2. Turn ignition switch OFF.
3. Release parking brake.
4. Push vehicle forward or backward.
5. Apply parking brake.

Does vehicle move forward or backward?

YES >> Refer to TM-286, "Symptom Table". GO TO 4.
NO >> GO TO 4.

4. CHECK “N” POSITION FUNCTION

1. Start engine.
2. Move selector lever to “N” position.
3. Release parking brake.

Does vehicle move forward or backward?

YES >> Refer to TM-286, "Symptom Table". GO TO 5.
NO >> GO TO 5.

5. CHECK SHIFT SHOCK

1. Apply foot brake.
2. Move selector lever to “R” position.

Is there large shock when changing from “N” to “R” position?

YES >> Refer to TM-286, "Symptom Table". GO TO 6.
NO >> GO TO 6.

6. CHECK “R” POSITION FUNCTION

Release foot brake for several seconds.

Does vehicle creep backward when foot brake is released?

YES >> GO TO 7.
NO >> Refer to TM-286, "Symptom Table". GO TO 7.

7. CHECK “D” POSITION FUNCTION

Move selector lever to “D” position and check if vehicle creeps forward.

Does vehicle creep forward in all positions?

YES >> Go to TM-312, "Cruise Test".
NO >> Stop “Road Test”. Refer to TM-286, "Symptom Table".

Cruise Test

INFOID:0000000003806511

1. CHECK VEHICLE SPEED WHEN SHIFTING GEARS — PART 1

1. Drive vehicle for approximately 10 minutes to warm engine oil and CVT fluid up to operating temperature.

CVT fluid operating temperature : 50 – 80°C (122 – 176°F)

2. Park vehicle on flat surface.
3. Move selector lever to “P” position.
4. Start engine.
5. Move selector lever to “D” position.
6. Accelerate vehicle at 2/8 throttle opening and check “Vehicle Speed When Shifting Gears”.

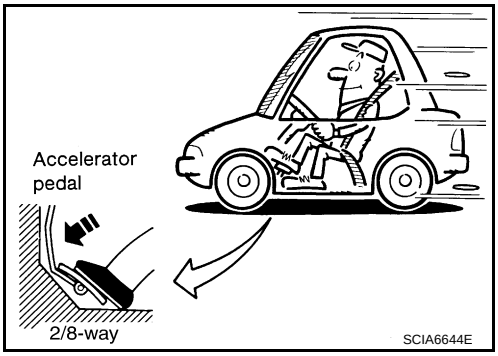

With CONSULT-III
- Read vehicle speed and engine speed. Refer to TM-337, "Vehicle Speed When Shifting Gears".

Is the inspection results normal?

YES >> GO TO 2.
NO >> Refer to TM-286, "Symptom Table". GO TO 2.

2. CHECK VEHICLE SPEED WHEN SHIFTING GEARS — PART 2

1. Park vehicle on flat surface.
2. Move selector lever to “D” position.
3. Accelerate vehicle at 8/8 throttle opening and check “Vehicle Speed When Shifting Gears”.

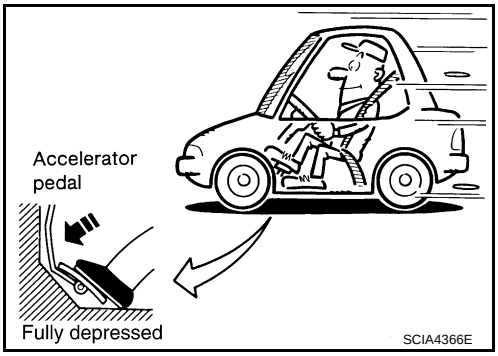

With CONSULT-III
- Read vehicle speed and engine speed. Refer to TM-337, "Vehicle Speed When Shifting Gears".

Is the inspection results normal?

YES >> GO TO 3.
NO >> Refer to TM-286, "Symptom Table". GO TO 3.

3. CHECK SPORT MODE CONDITION (PART 1)

1. Park vehicle on flat surface.
2. Push sport mode switch. (Sport mode ON.)
3. Accelerate vehicle at 2/8 throttle opening and check “Vehicle Speed When Shifting Gears”.

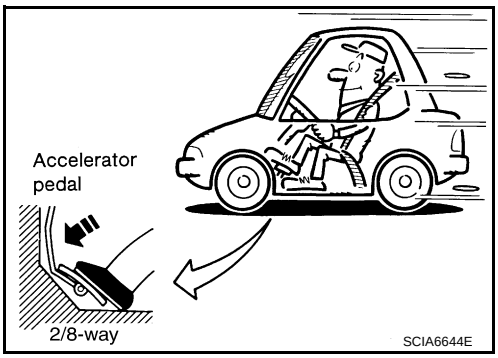

With CONSULT-III
- Read vehicle speed and engine speed. Refer to TM-337, "Vehicle Speed When Shifting Gears".

Is the inspection results normal?

YES >> GO TO 4.
NO >> Refer to TM-286, "Symptom Table". GO TO 4.

4. CHECK SPORT MODE CONDITION (PART 2)

1. Park vehicle on flat surface.

2. Accelerate vehicle at 8/8 throttle opening and check “Vehicle Speed When Shifting Gears”.

With CONSULT-III
- Read vehicle speed and engine speed. Refer to TM-337, "Vehicle Speed When Shifting Gears".

Is the inspection results normal?

YES >> GO TO 5.
NO >> Refer to TM-286, "Symptom Table". GO TO 5.

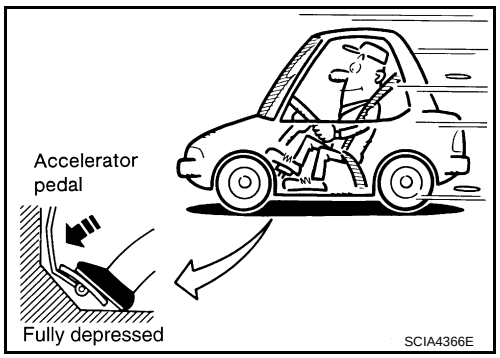

5. CHECK “L” POSITION FUNCTION (PART 1)

1. Park vehicle on flat surface.
2. Move selector lever to “L” position.
3. Accelerate vehicle at 2/8 throttle opening and check “Vehicle Speed When Shifting Gears”.

With CONSULT-III
- Read vehicle speed and engine speed. Refer to TM-337, "Vehicle Speed When Shifting Gears".

Is the inspection results normal?

YES >> GO TO 6.
NO >> Refer to TM-286, "Symptom Table". GO TO 6.

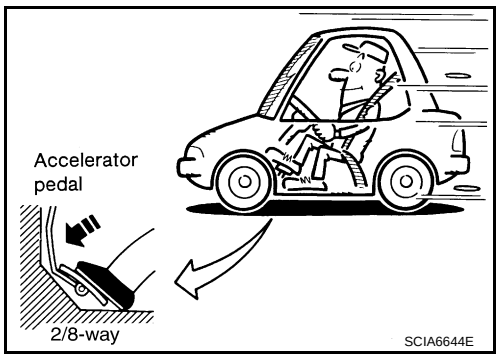

6. CHECK “L” POSITION FUNCTION (PART 2)

1. Park vehicle on flat surface.
2. Accelerate vehicle at 8/8 throttle opening and check “Vehicle Speed When Shifting Gears”.

With CONSULT-III
- Read vehicle speed and engine speed. Refer to TM-337, "Vehicle Speed When Shifting Gears".

Does it switch to manual mode?

YES >> GO TO 7.
NO >> Refer to TM-286, "Symptom Table". GO TO 7.

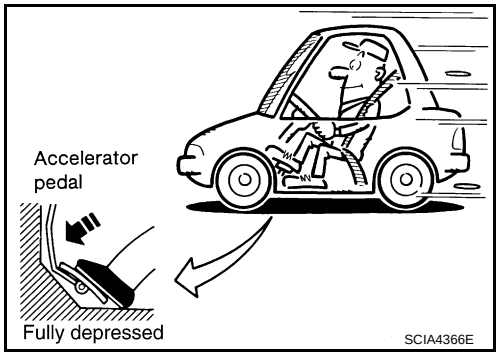

7. CHECK ENGINE BRAKE FUNCTION

Check engine brake.

Does engine braking effectively reduce vehicle speed in “L” position?

YES >> 1. Stop the vehicle.
2. Perform self-diagnosis. Refer to TM-204, "CONSULT-III Function (TRANSMISSION)".
NO >> Refer to TM-286, "Symptom Table". Then continue trouble diagnosis.

CVT POSITION

Inspection and Adjustment

INFOID:0000000003806512

INSPECTION

1. Place selector lever in “P” position, and turn ignition switch ON (engine stop).
2. Check that selector lever can be shifted to other than “P” position when brake pedal is depressed. Also check that selector lever can be shifted from “P” position only when brake pedal is depressed.
3. Move the selector lever and check for excessive effort, sticking, noise or rattle.
4. Check that selector lever stops at each position with the feel of engagement when it is moved through all the positions. Check that the actual position of the selector lever matches the position shown by the shift position indicator and the manual lever on the transaxle.
5. The method of operating the selector lever to individual positions correctly should be as shown.
6. When selector button is pressed in “P”, “R”, “N”, “D” or “L” position without applying forward/backward force to selector lever, check button operation for sticking.
7. Check that back-up lamps illuminate only when selector lever is placed in the “R” position.
8. When in “R” position, check that back-up lamps illuminate even when the selector lever is pushed toward the “P” position.
   CAUTION:
   Check the lighting without pressing shift button.

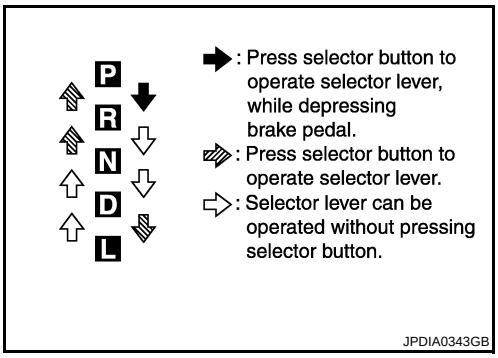

9. Check that the back-up lamps do not illuminate when selector lever is pushed toward the “R” position when in the “P” or “N” position.
   CAUTION:
   Check the lighting without pressing shift button.
10. Check that the engine can only be started with the selector lever in the “P” and “N” positions.
11. Check that transaxle is locked completely in “P” position.

ADJUSTMENT

1. Place selector lever in “ P” position.
   CAUTION:
   Turn wheels more than 1/4 rotations and apply the park lock.
2. Loosen nut (A) and place manual lever (B) in “P” position.
   CAUTION:
   Never apply any force to the manual lever.
3. Tighten nut. Refer to TM-319, "Exploded View".
   CAUTION:
   Fix the manual lever when tightening.

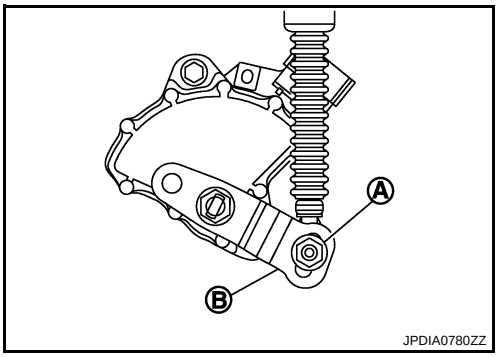

ON-VEHICLE REPAIR

TRANSMISSION CONTROL MODULE

Exploded View

INFOID:0000000003806513

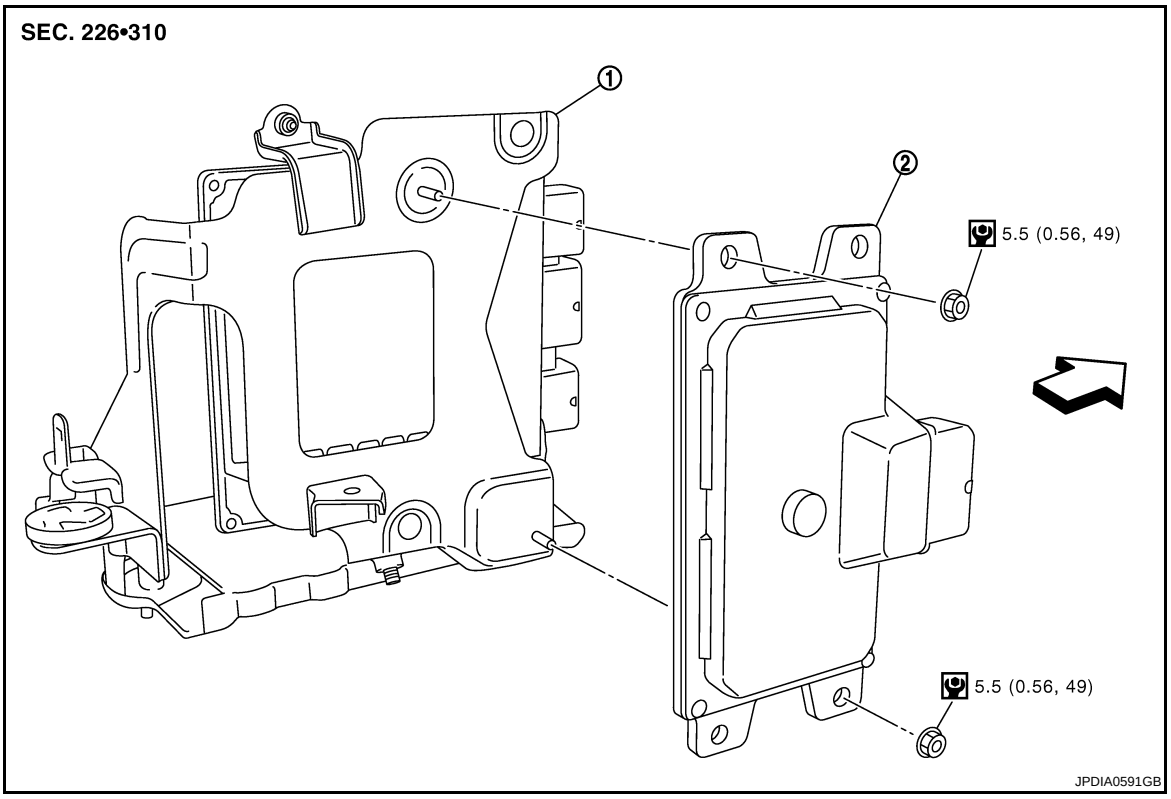

1. Bracket
2. TCM

⇦ : Vehicle front

Refer to GI-4, "Components" for symbols in the figure.

Removal and Installation

INFOID:0000000003806514

REMOVAL

CAUTION:

Never impact on TCM when removing or installing TCM.

1. Disconnect the battery cable from negative terminal.
2. Remove the air duct (inlet). Refer to EM-26, "Exploded View".
3. Disconnect the TCM connector (A).

⇦ : Vehicle front

4. Remove the TCM (1) from the bracket.

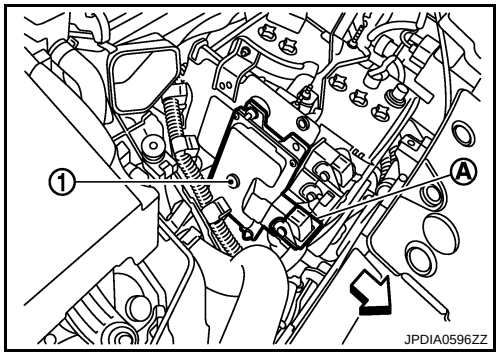

INSTALLATION

Note the following, and install in the reverse order of removal.

CAUTION:
After TCM is replaced, refer to TM-179, "ADDITIONAL SERVICE WHEN REPLACING CONTROL UNIT : Service After Replacing TCM and Transaxle Assembly".

CONTROL DEVICE

Exploded View

INFOID:0000000003890382

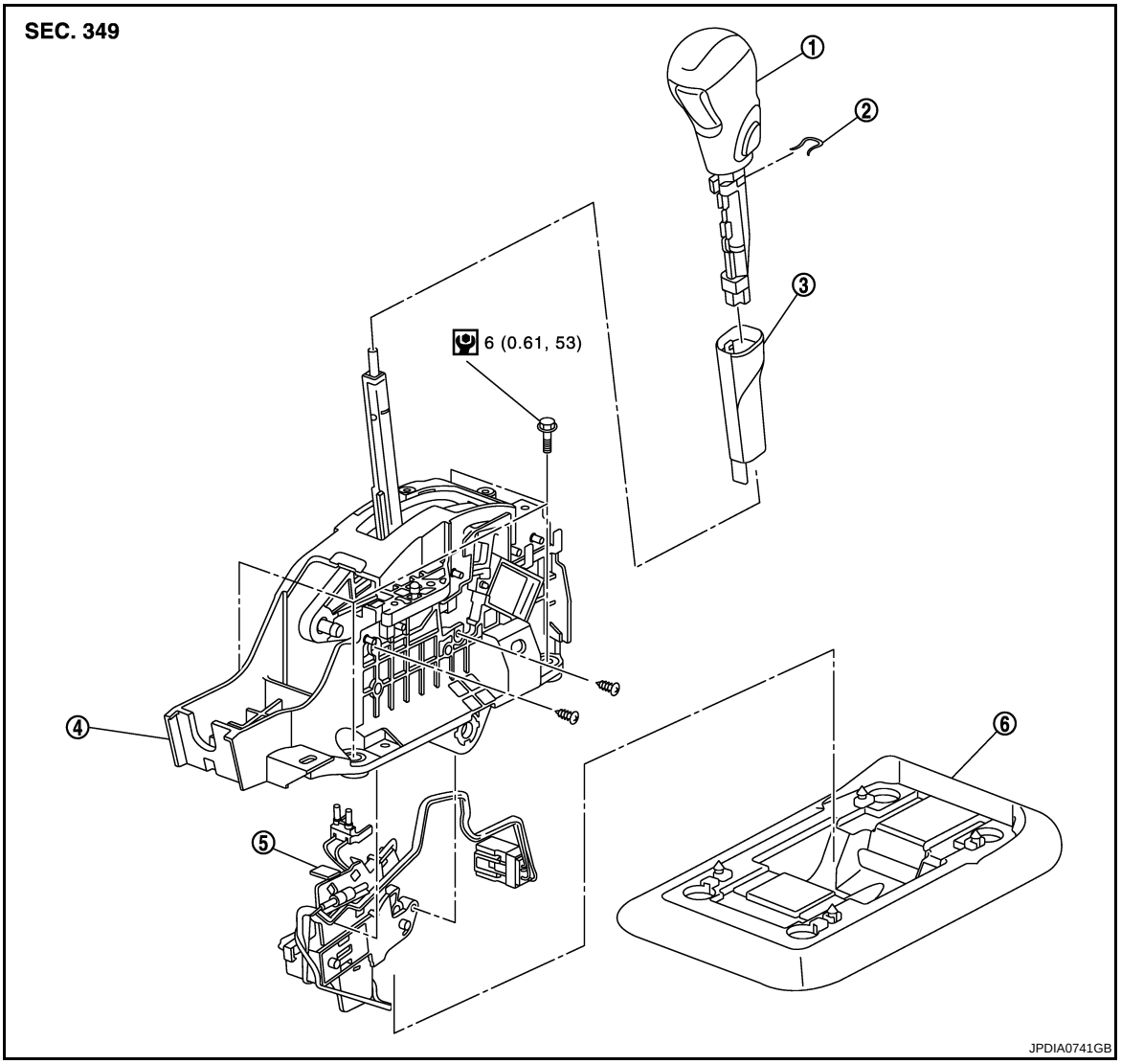

1.	Selector lever knob	2.	Lock pin	3.	Knob cover
4.	Control device assembly	5.	Shift lock unit	6.	Dust cover

Refer to GI-4, "Components" for symbols in the figure.

Removal and Installation

INFOID:0000000003890383

REMOVAL

1. Disconnect the battery cable from the negative terminal.

2. Slide knob cover (1) below selector lever downward.
   CAUTION:
   Be careful not to damage knob cover.
3. Pull lock pin (2) out of selector lever knob (3).
4. Remove selector lever knob and knob cover.
5. Remove center console assembly. Refer to IP-22, "Exploded View".

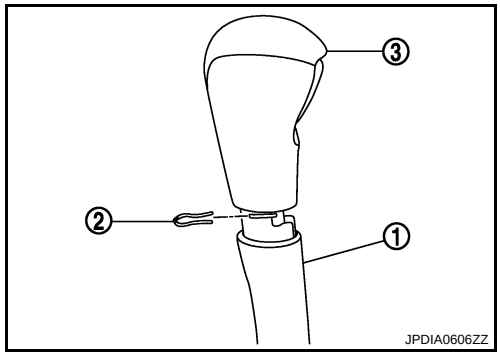

6. Remove control cable (1) from control device assembly. Refer to TM-319, "Exploded View".
7. Remove control device assembly (2).

   ⬅ : Bolt

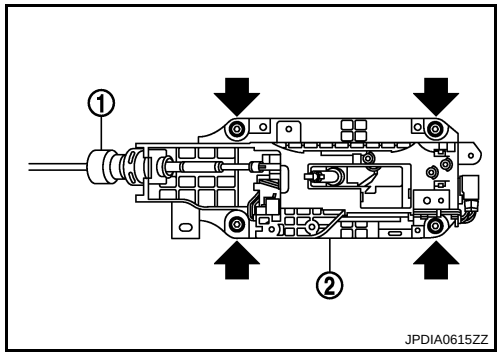

8. Remove control device connector (A) using a flat-bladed screw-driver (B).
   CAUTION:
   Be careful not to damage control device connector.
9. Remove shift lock unit from control device assembly.

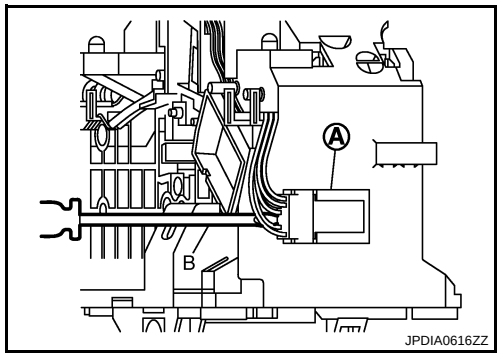

INSTALLATION

Note the following, and install in the reverse order of removal.

When installing control cable (1) to control device assembly (2), check that control cable is fully pressed in with the ribbed (A) surface facing upward.

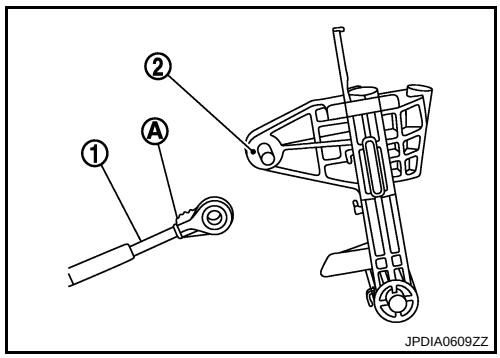

Inspection and Adjustment

INFOID:0000000003890384

ADJUSTMENT AFTER INSTALLATION

Adjust the CVT positions after installing control device. Refer to TM-152, "Inspection and Adjustment".

INSPECTION AFTER INSTALLATION

Check the CVT positions after adjusting the CVT positions. Refer to TM-152, "Inspection and Adjustment".

CONTROL CABLE

Exploded View

INFOID:0000000003806518

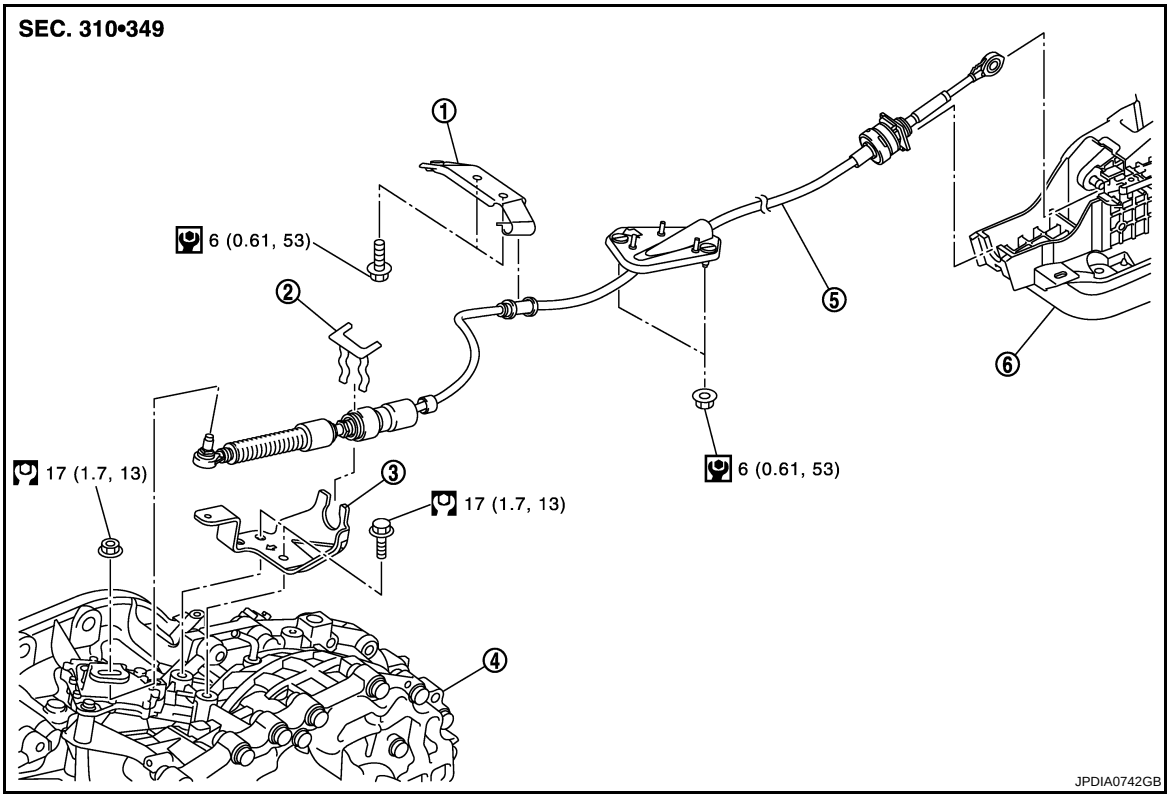

1. Bracket 1
2. Lock plate
3. Bracket 2
4. Transaxle assembly
5. Control cable
6. Control device assembly

Refer to GI-4, "Components" for symbols in the figure.

Removal and Installation

INFOID:0000000003806519

REMOVAL

CAUTION:

Check that parking brake is applied before removal/installation.

1. Disconnect control cable from control device assembly. Refer to TM-319, "Exploded View".
2. Remove the air duct (inlet) and air cleaner case. Refer to EM-26, "Exploded View".
3. Remove control cable (1) from manual lever (A).

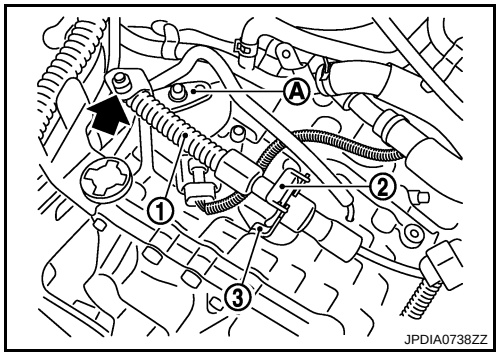

: Nut

4. Remove lock plate (2) from control cable.
5. Remove control cable from bracket 2 (3).
6. Remove exhaust front tube. Refer to EX-5, "Exploded View".
7. Remove heat plate.

8. Remove control cable (1) from bracket 1 (2).
9. Remove nuts (⬅).

   ⇦ : Vehicle front

10. Remove rear foot duct 1 (right). Refer to VTL-55, "REAR FOOT DUCT 1 : Exploded View".
11. Remove the control cable from the vehicle.

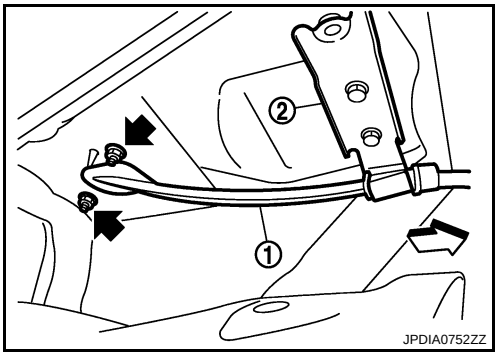

INSTALLATION

Note the following, and install in the reverse order of removal.

When installing the control cable (1) to the control device assembly (2), make sure that the control cable is fully pressed in with the ribbed (A) surface facing upward.

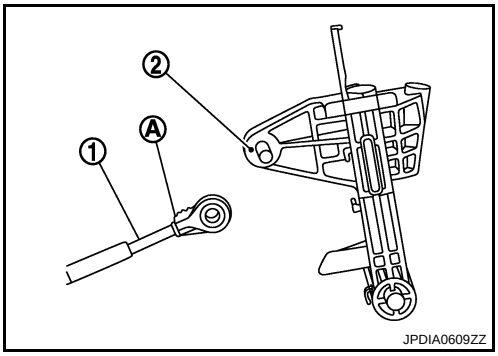

Inspection and Adjustment

INFOID:0000000003806520

ADJUSTMENT AFTER INSTALLATION

Adjust the CVT positions after installing control cable. Refer to TM-314, "Inspection and Adjustment".

INSPECTION AFTER INSTALLATION

Check the CVT positions after adjusting the CVT positions. Refer to TM-314, "Inspection and Adjustment".

OIL PAN

Exploded View

INFOID:0000000003806524

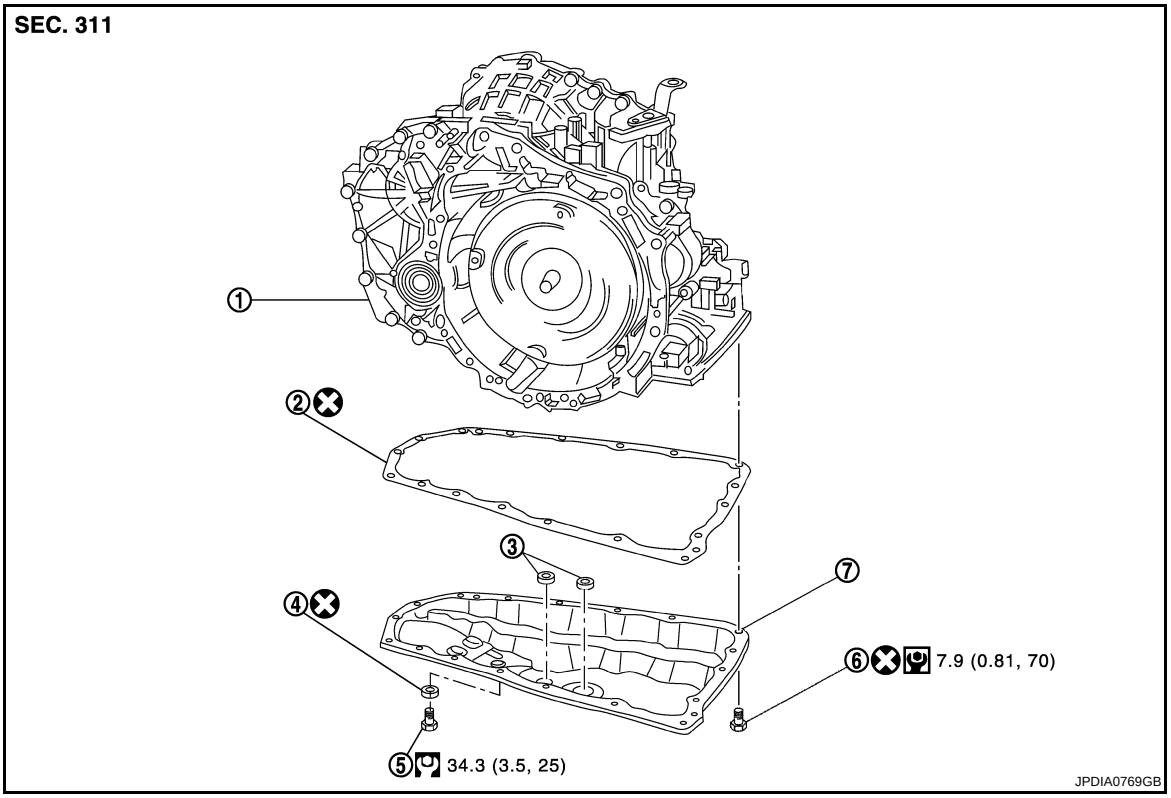

1. Transaxle assembly
2. Oil pan gasket
3. Magnet
4. Drain plug gasket
5. Drain plug
6. Oil pan fitting bolt
7. Oil pan

Refer to GI-4, "Components" for symbols in the figure.

Removal and Installation

INFOID:0000000003806525

REMOVAL

1. Remove drain plug (1), and then drain CVT fluid from oil pan.

   ⇦ : Vehicle front

2. Remove oil pan fitting bolts (2).
3. Remove oil pan (3).
4. Remove oil pan gasket from oil pan.
5. Remove magnet from oil pan.

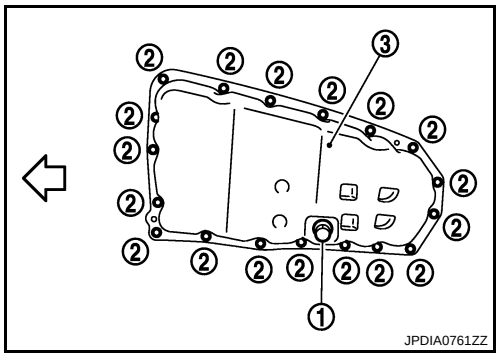

INSTALLATION

Note the following, and install in the reverse order of removal.

CAUTION:

- **Completely remove all moisture, oil and old gasket, etc. from the oil pan gasket mounting surface of transaxle case and oil pan.**
- **Never reuse oil pan gasket, drain plug gasket and oil pan fitting bolts.**

Inspection

INFOID:0000000003806526

Check foreign materials in oil pan to help determine causes of malfunction. If the CVT fluid is very dark, smells burned, or contains foreign particles, frictional material (clutches) may need replacement. A tacky film that will not wipe clean indicates varnish build up. Varnish can cause valves and clutches to stick and can inhibit pump pressure.

INSPECTION AFTER INSTALLATION

Check for CVT fluid leakage and check CVT fluid level. Refer to TM-304, "Inspection".

PRIMARY SPEED SENSOR

Exploded View

INFOID:0000000003806530

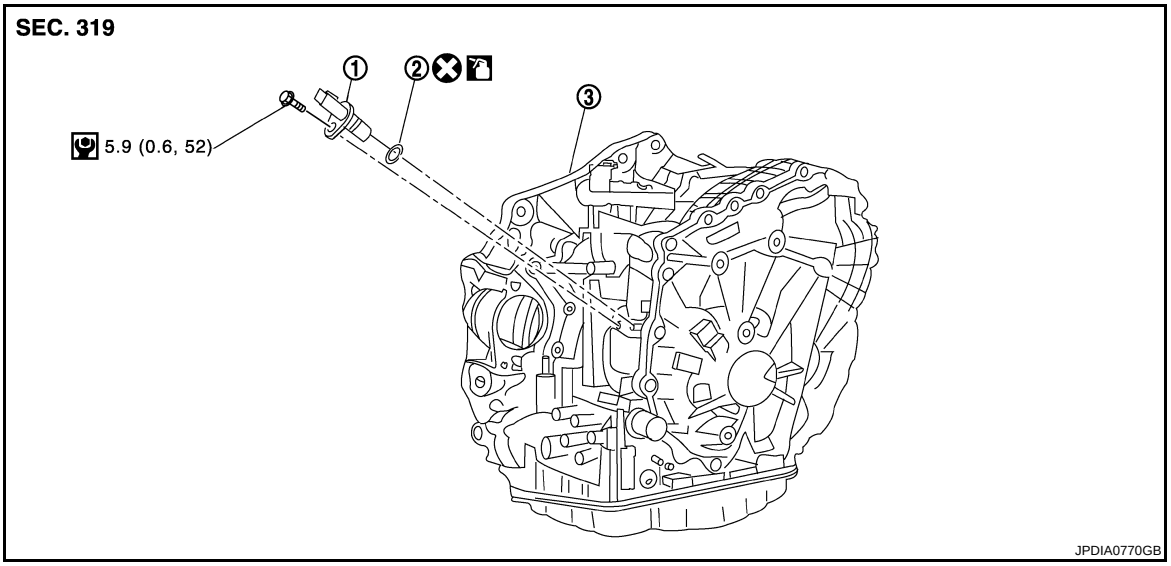

1. Primary speed sensor
2. O-ring
3. Transaxle assembly

: Apply CVT Fluid NS-2.

Refer to GI-4, "Components" for symbols not described above.

Removal and Installation

INFOID:0000000003806531

REMOVAL

1. Remove the air duct (inlet) and air cleaner case. Refer to EM-26, "Exploded View".
2. Remove the battery.
3. Disconnect ECM connector and TCM connector.
4. Remove battery bracket.
5. Remove CVT fluid level gauge and CVT fluid charging pipe. Refer to TM-332, "Exploded View".
6. Disconnect primary speed sensor connector.
7. Remove primary speed sensor.
8. Remove O-ring from primary speed sensor.

INSTALLATION

Note the following, and install in the reverse order of removal.

CAUTION:

- **Never reuse O-ring.**
- **Apply CVT fluid to O-ring.**

Inspection

INFOID:0000000003806532

After completing installation, check for CVT fluid leakage and check CVT fluid level. Refer to TM-304, "Inspection".

SECONDARY SPEED SENSOR

Exploded View

INFOID:0000000003806533

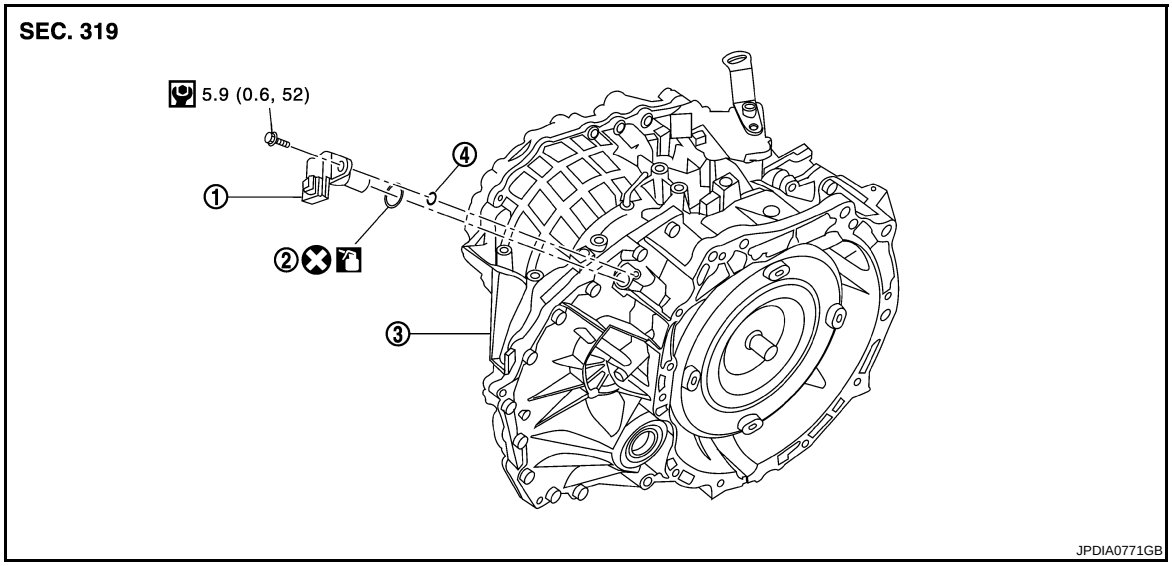

1. Secondary speed sensor
2. O-ring
3. Transaxle assembly
4. Shim

: Apply CVT Fluid NS-2.

Refer to GI-4, "Components" for symbols not described above.

Removal and Installation

INFOID:0000000003806534

REMOVAL

1. Disconnect the battery cable from the negative terminal.
2. Remove air duct (inlet) and air cleaner case. Refer to EM-26, "Exploded View".
3. Disconnect secondary speed sensor connector.
4. Remove secondary speed sensor and shim.
5. Remove O-ring from secondary speed sensor.

INSTALLATION

Note the following, and install in the reverse order of removal.

CAUTION:

- **Never reuse O-ring.**
- **Apply CVT fluid to O-ring.**

Inspection

INFOID:0000000003806535

After completing installation, check for CVT fluid leakage and check CVT fluid level. Refer to TM-304, "Inspection".

DIFFERENTIAL SIDE OIL SEAL

Exploded View

INFOID:0000000003806536

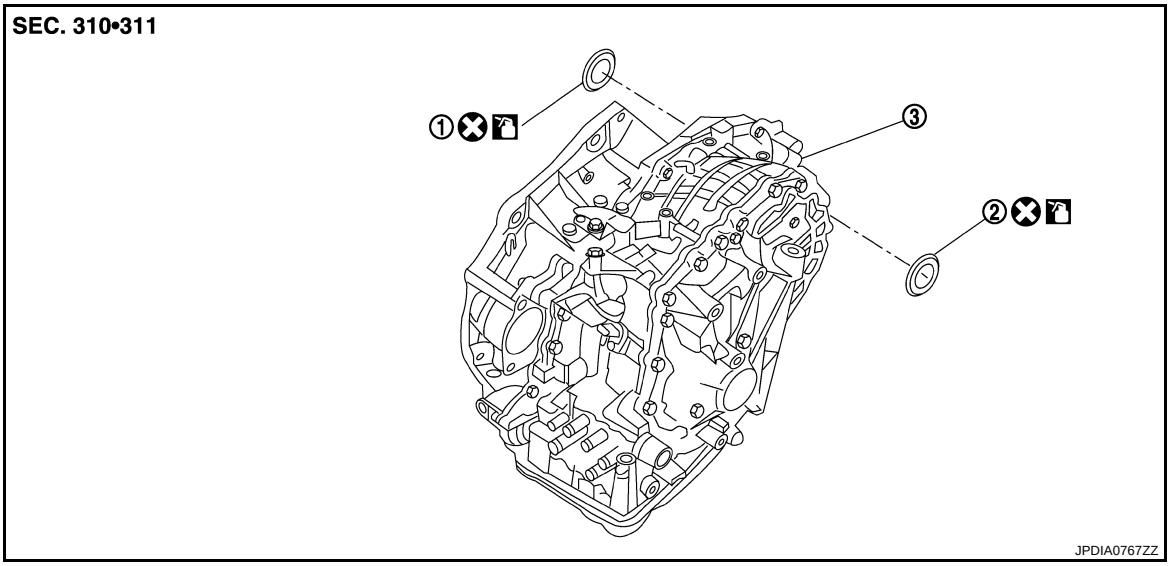

1. RH differential side oil seal
2. LH differential side oil seal
3. Transaxle assembly

: Apply CVT Fluid NS-2.

Refer to GI-4, "Components" for symbols not described above.

Removal and Installation

INFOID:0000000003806537

REMOVAL

1. Remove drive shaft assembly. Refer to FAX-16, "Exploded View".
2. Remove differential side oil seals (1) using a flat-bladed screwdriver (A).
   CAUTION:
   Be careful not to scratch transaxle case and converter housing.

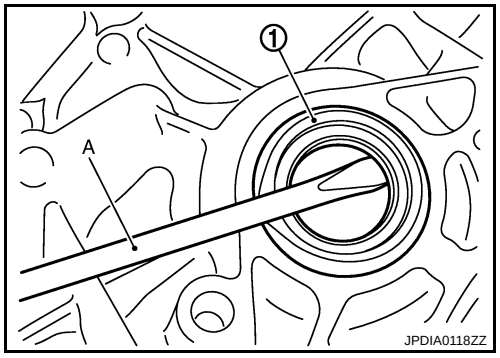

INSTALLATION

Note the following, and install in the reverse order of removal.

- Drive each differential side oil seal evenly using a commercial service tool so that differential side oil seal protrudes by the dimension (A) or (B) respectively.

Unit: mm (in)

Dimension A (transaxle case side)	1.8 ± 0.5 (0.071 ± 0.020)
Dimension B (converter housing side)	2.2 ± 0.5 (0.087 ± 0.020)

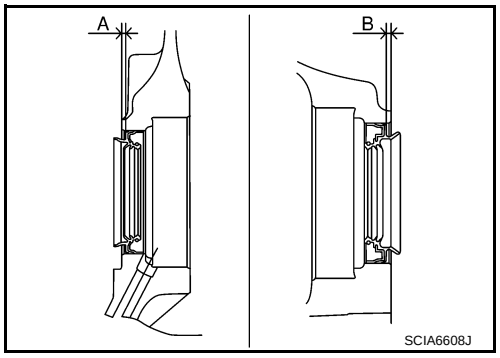

NOTE:
Differential side oil seal pulling direction is used as the reference.

CAUTION:

- **Never reuse differential side oil seals.**
- **Apply CVT fluid to differential side oil seals.**

Drift to be used:

Location	Tool number
Transaxle case side	Commercial service tool [Outer diameter: 54 mm (2.13 in), inner diameter: 47 mm (1.85 in)]
Converter housing side	

Inspection

INFOID:0000000003806538

After completing installation, check for CVT fluid leakage and check CVT fluid level. Refer to TM-304, "Inspection".

OIL PUMP FITTING BOLT

Description

INFOID:0000000003806542

Replace the oil pump fitting bolt and the O-ring if oil leakage or exudes from the oil pump fitting bolt.

Exploded View

INFOID:0000000003806543

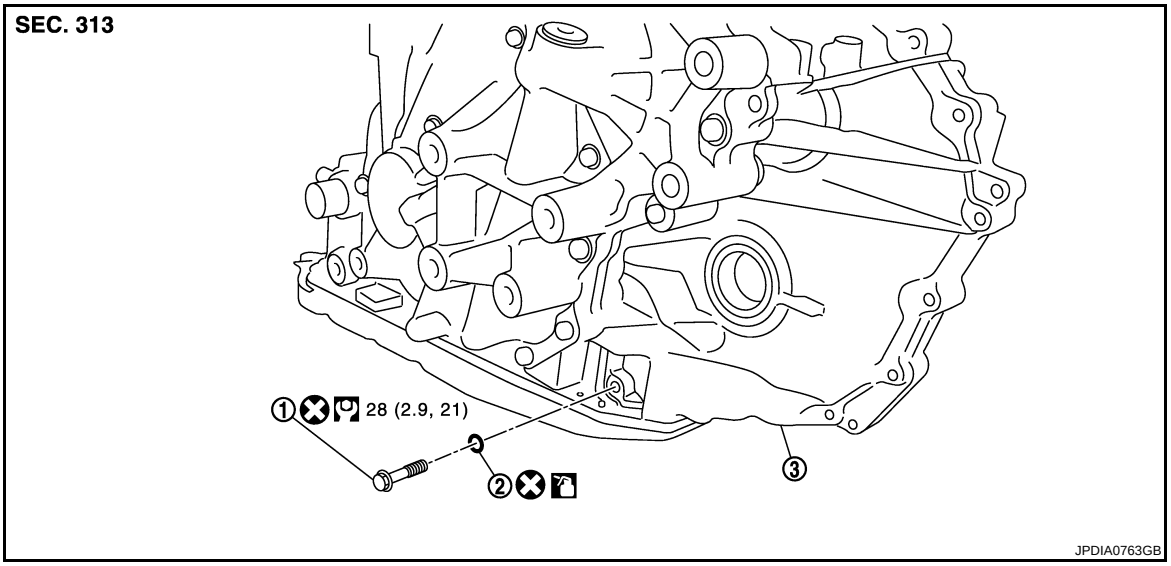

1. Oil pump fitting bolt
2. O-ring
3. Transaxle assembly

: Apply CVT Fluid NS-2.

Refer to GI-4, "Components" for symbols not described above.

Removal and Installation

INFOID:0000000003806544

REMOVAL

1. Remove Oil pump fitting bolt (1) from transaxle assembly.
2. Remove O-ring from oil pump fitting bolt.

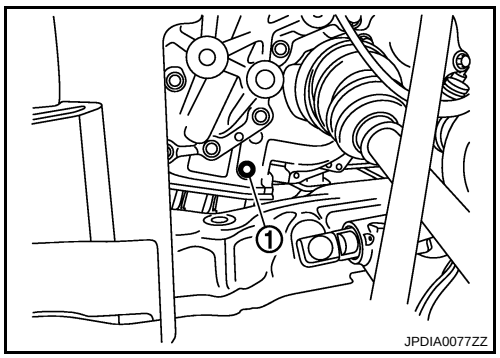

INSTALLATION

Note the following, and install in the reverse order of removal.

CAUTION:

- **Never reuse oil pump fitting bolt and O-ring.**
- **Apply CVT fluid to O-ring.**

Inspection

INFOID:0000000003806545

After completing installation, check for CVT fluid leakage and check CVT fluid level. Refer to TM-304, "Inspection".

AIR BREATHER HOSE

Exploded View

INFOID:0000000003806546

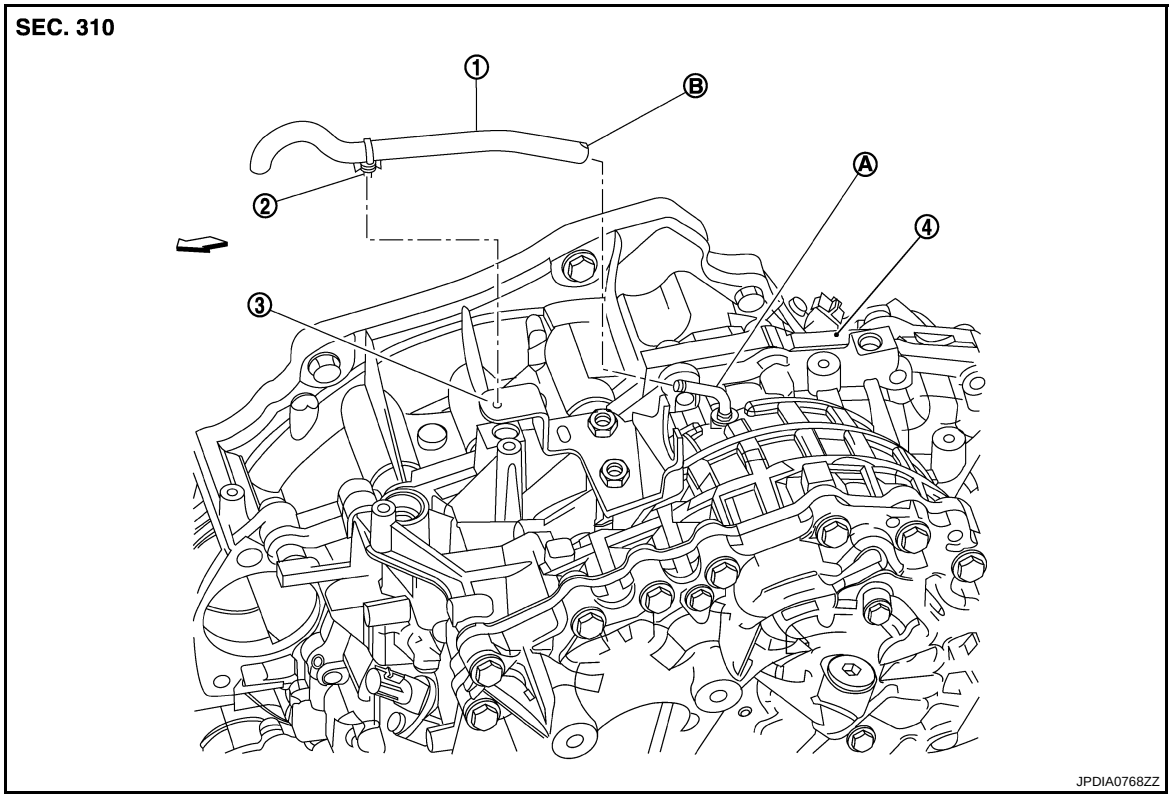

1. Air breather hose	2. Clip	3. Bracket
4. Transaxle assembly		
A. Air breather tube	B. Paint mark	
⇦ : Vehicle front		

Removal and Installation

INFOID:0000000003806547

REMOVAL

1. Remove air duct (inlet) and air cleaner case. Refer to EM-26, "Exploded View".
1. Remove clip from the bracket.
2. Remove air breather hose from transaxle assembly.

INSTALLATION

Note the following, and install in the reverse order of removal.

CAUTION:

- **Install air breather hose with paint mark facing upward.**
- **Insert air breather hose a minimum of 17 mm (0.67 in) onto air breather tube (to end of air breather tubes radius end).**
- **Install air breather hose to bracket by fully inserting the clip.**
- **Make sure there are no pinched or restricted areas on air breather hose caused by bending or winding when installing it.**

FLUID COOLER SYSTEM

Exploded View

INFOID:0000000003886234

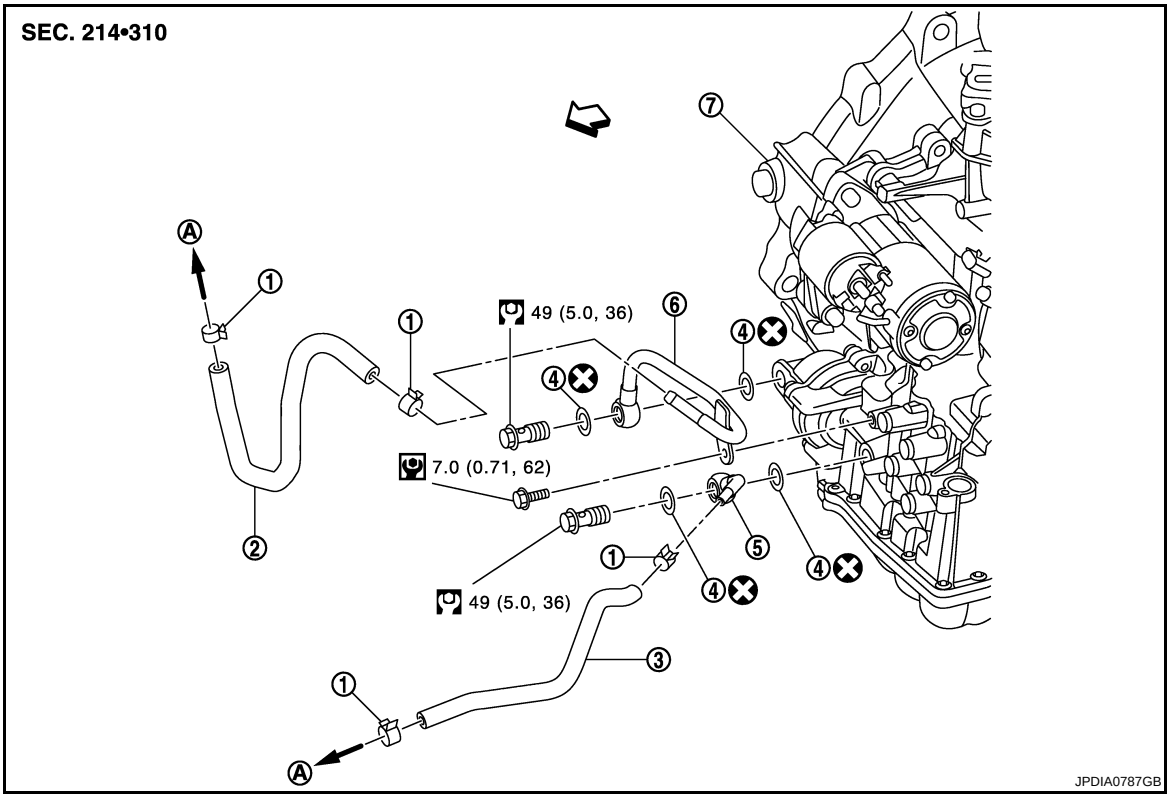

1. Hose clamp
2. Fluid cooler hose A
3. Fluid cooler hose B
4. Copper washer
5. CVT fluid cooler tube
6. CVT fluid cooler tube
7. Transaxle assembly

A. To radiator

⇦: Vehicle front

Refer to GI-4, "Components" for symbols in the figure.

Removal and Installation

INFOID:0000000003886235

REMOVAL

1. Remove air duct (inlet). Refer to EM-26, "Exploded View".
2. Remove engine under cover. Refer to EXT-28, "Exploded View".
3. Remove fender protector (left side). Refer to EXT-22, "FENDER PROTECTOR : Exploded View".
4. Remove fluid cooler hose A and fluid cooler hose B.
5. Remove CVT fluid cooler tube from transaxle assembly.

INSTALLATION

Note the following, and install in the reverse order of removal.

CAUTION:

Never reuse copper washer.

- When installing CVT fluid cooler tube (1) to transaxle assembly:
- Contact CVT fluid cooler tube a boss portion (A) of the transaxle case.
- Tighten the bolt of CVT fluid cooler tube without moving the CVT fluid cooler tube

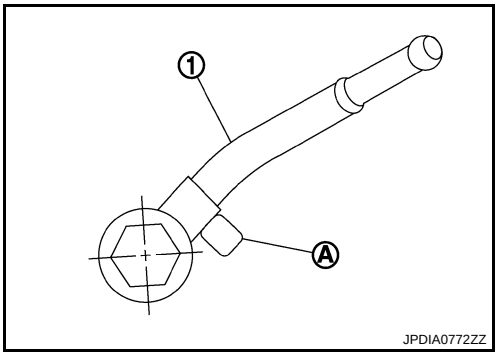

- Refer to the followings when installing fluid cooler hose.

Fluid cooler hose	Hose end	Paint mark	Position of hose clamp*
A	Radiator assembly side	Facing backward	A
	CVT fluid cooler tube side	Facing upward	B
B	Radiator assembly side	Facing upward	C
	CVT fluid cooler tube side	Facing upward	D

*: Refer to the illustrations for the specific position each hose clamp tab.

- The illustrations indicate the view from the hose ends.

⇦ E : Vehicle front

⇦ F : Vehicle upper

- When installing hose clamps center line of each hose clamp tab should be positioned as shown in the figure.

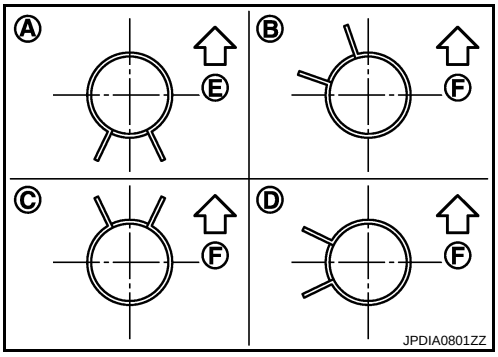

- Insert fluid cooler hose according to dimension (A) described below.

(1)	(2)	Tube type	Dimension A
Fluid cooler hose A	Radiator side	A	End reaches the tube bend R position.
	CVT fluid cooler tube side	B	33 mm (1.30 in) [End reaches the 2-stage bulge (D).]
Fluid cooler hose B	Radiator side	C	Insert the hose until the hose touches the radiator.
	CVT fluid cooler tube side	B	33 mm (1.30 in) [End reaches the 2-stage bulge (D).]

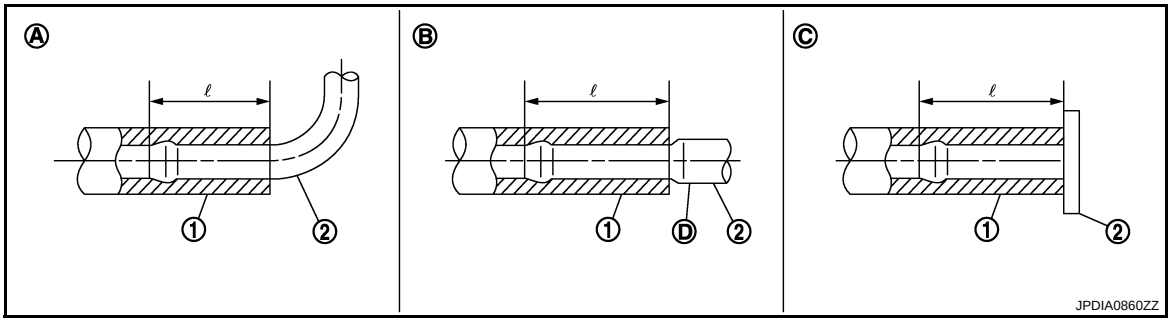

- Set hose clamps (1) at the both ends of fluid cooler hose (2) with dimension (A) from the hose edge.

Dimension A : 5 – 9 mm (0.20 – 0.35 in)

- Hose clamp should not interfere with the bulge of fluid cooler tube.

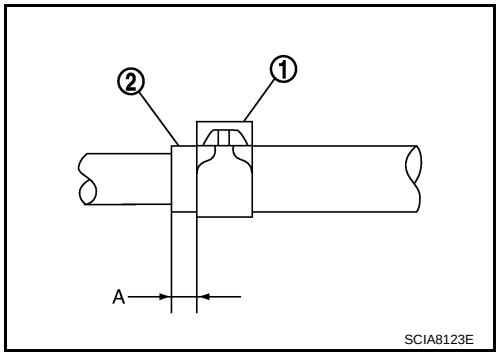

INFOID:0000000003886236

Inspection

After completing installation, check for CVT fluid leakage and CVT fluid level. Refer to TM-304, "Inspection".

REMOVAL AND INSTALLATION

TRANSAXLE ASSEMBLY

Exploded View

INFOID:0000000003806551

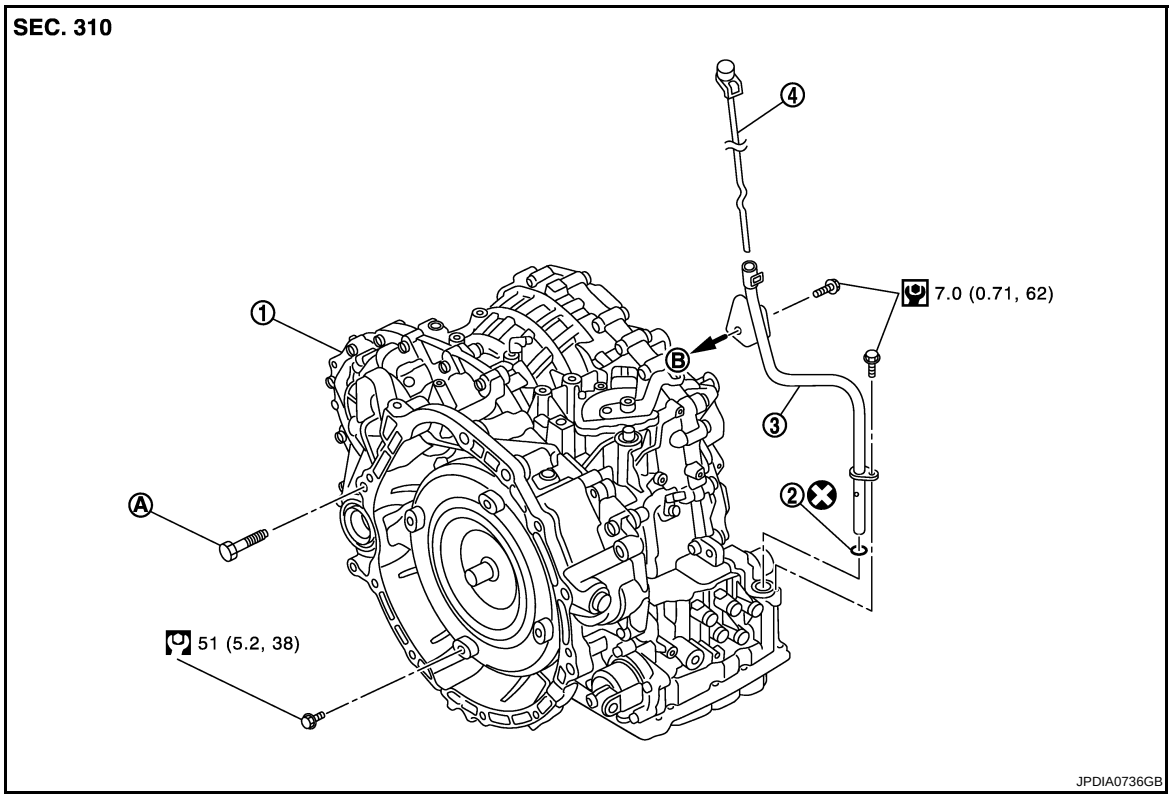

1. Transaxle assembly
2. O-ring
3. CVT fluid charging pipe
4. CVT fluid level gauge

A. For tightening torque, refer to TM-332, "Removal and Installation".

B. To water outlet

Refer to GI-4, "Components" for symbols in the figure.

Removal and Installation

INFOID:0000000003806552

WARNING:

Never remove the reservoir tank cap when the engine is hot. Serious burns could occur from high pressure engine coolant escaping from the reservoir tank.

REMOVAL

1. Remove the engine, the transaxle assembly and front suspension member. Refer to EM-67, "Exploded View".
2. Lift with hoist and separate engine, transaxle assembly from front suspension member. Refer to EM-67, "Exploded View".
3. Remove air breather hose. Refer to TM-328, "Exploded View".
4. Remove CVT fluid level gauge and CVT fluid charging pipe.
5. Disconnect the following connectors:
   - Primary speed sensor connector
   - Secondary speed sensor connector
   - PNP switch connector
   - CVT unit connector
6. Remove crankshaft position sensor (POS). Refer to EM-38, "Exploded View".

7. Remove rear plate. Refer to EM-38, "Exploded View".
8. Turn crankshaft, and remove the four tightening bolts (⬅) for drive plate and torque converter.
   CAUTION:
   When turning crankshaft, turn it clockwise as viewed from the front of the engine.
9. Remove transaxle assembly fixing bolts with power tool.

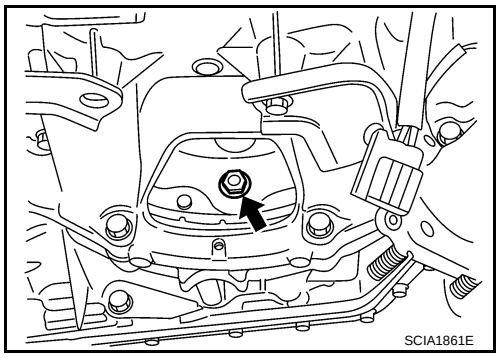

10. Remove transaxle assembly from engine assembly with a hoist.
11. Remove CVT fluid cooler tube from transaxle assembly. Refer to TM-329, "Exploded View".

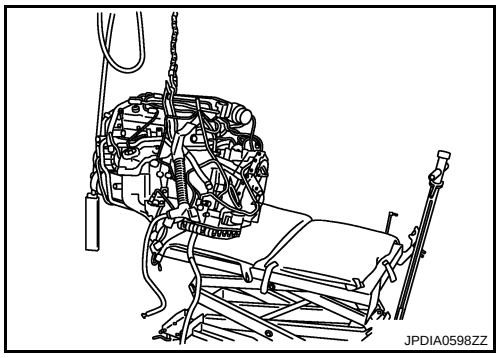

INSTALLATION

Note following, and install in the reverse order of removal.

CAUTION:

- **Never reuse O-ring.**
- **Apply petroleum jelly to O-ring.**
- **Check fitting of dowel pin (⬅) when installing transaxle assembly to engine assembly.**

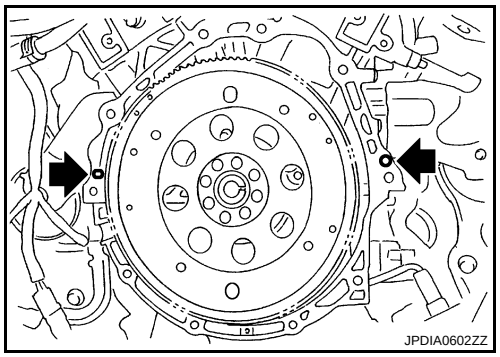

- When installing transaxle assembly to the engine assembly, attach the fixing bolts in accordance with the following.

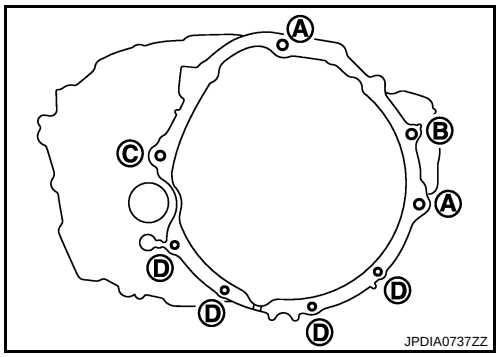

Insertion direction	Transaxle assembly to engine assembly		Engine assembly to transaxle assembly	
Bolt position	A	B	C	D
Number of bolts	2	1	1	4
Bolt length mm (in)	55 (2.17)	35 (1.38)	55 (2.17)	40 (1.57)
Tightening torque N·m (kg-m, ft-lb)	75 (7.7, 55)			50 (5.1, 37)

- Align the position of tightening bolts (⬅) for drive plate with those of the torque converter, and temporarily tighten the bolts. Then, tighten the bolts to the specified torque.

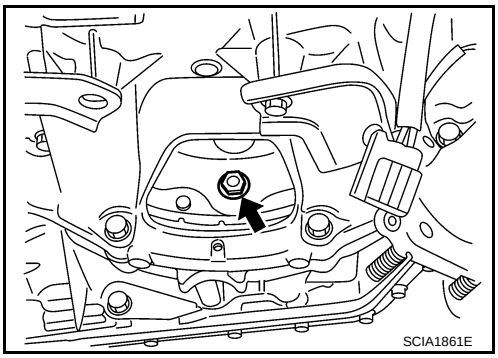

CAUTION:
- **When turning crankshaft, turn it clockwise as viewed from the front of the engine.**
- **When tightening the tightening bolts for the torque converter after fixing the crankshaft pulley bolts, confirm the tightening torque of the crankshaft pulley mounting bolts. Refer to EM-53, "Removal and Installation".**
- **After converter is installed to drive plate, rotate crankshaft several turns and check that transaxle rotates freely without binding.**

Inspection

INFOID:0000000003806553

INSPECTION BE FORE INSTALLATION

- After inserting a torque converter to the CVT, check that distance (A) within the reference value limit.

B : Scale
C : Straightedge

Distance A : Refer to TM-338, "Torque Converter".

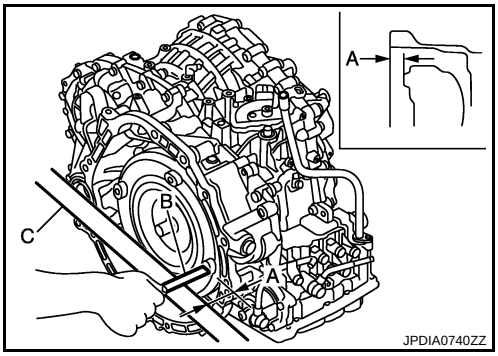

INSPECTION AFTER INSTALLATION

- After completing installation, check the following item.
- CVT fluid leakage and CVT fluid level. Refer to TM-304, "Inspection".
- CVT position. Refer to TM-314, "Inspection and Adjustment".

DISASSEMBLY AND ASSEMBLY

TORQUE CONVERTER AND CONVERTER HOUSING OIL SEAL

Exploded View

INFOID:0000000003806557

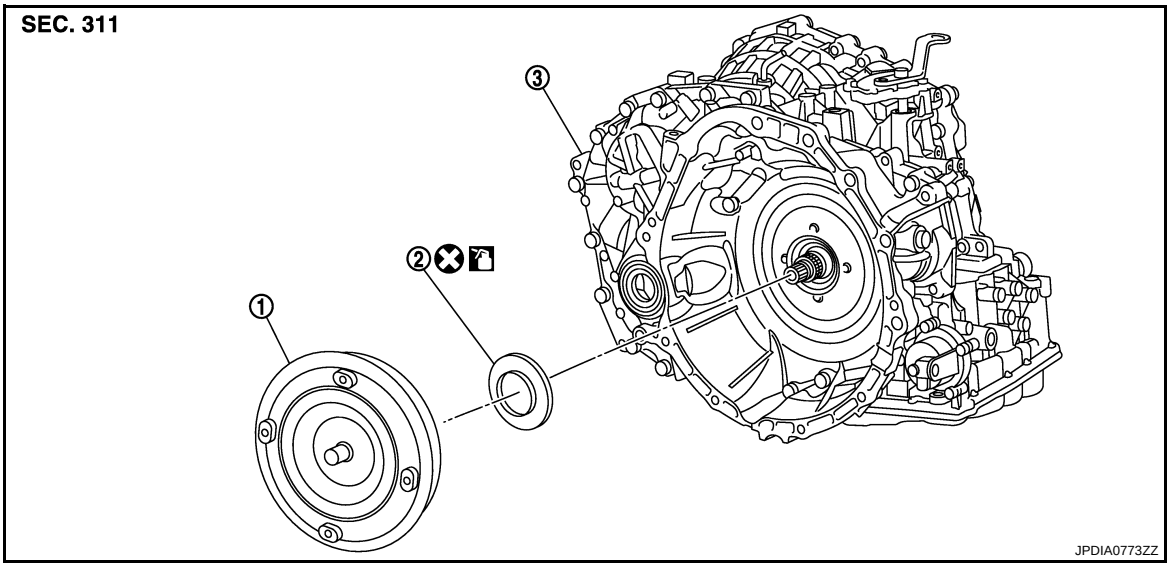

1. Torque converter
2. Converter housing oil seal
3. Transaxle assembly

: Apply CVT Fluid NS-2.

Refer to GI-4, "Components" for symbols not described on the above.

Disassembly

INFOID:0000000003806558

1. Remove transaxle assembly. Refer to TM-332, "Exploded View".
2. Remove torque converter from transaxle assembly.
   CAUTION:
   Never damage bushing inside of torque converter sleeve when removing torque converter.
3. Remove converter housing oil seal using a flat-bladed screwdriver.
   CAUTION:
   Be careful not to scratch converter housing.

Assembly

INFOID:0000000003806559

Note the following, and install in the reverse order of removal.

- Drive converter housing oil seal (1) evenly using a drift (commercial service tool) (A) so that converter housing oil seal protrudes by the dimension (B) respectively.

Unit: mm (in)

Commercial service tool: A	Outer diameter: 65 (2.56)
	Inner diameter: 60 (2.36)

2 : Transaxle assembly

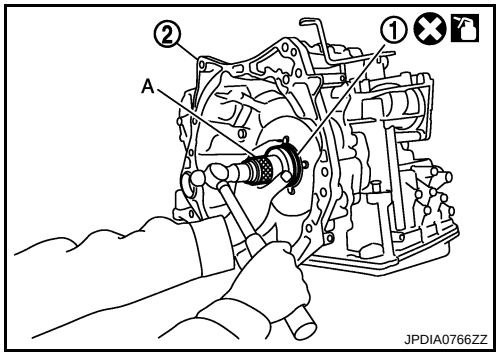

Unit: mm (in)

Dimension B	1.0 ± 0.5 (0.039 ± 0.020)

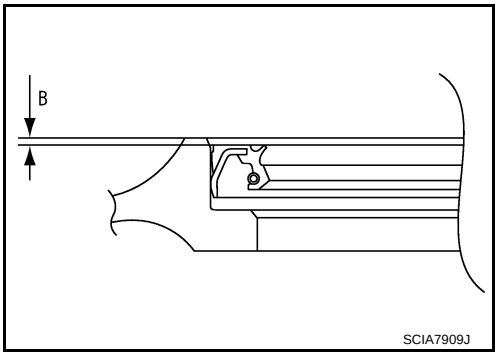

NOTE:
Converter housing oil seal pulling direction is used as the reference.

- After completing installation, check for CVT fluid leakage and CVT fluid level. Refer to TM-304, "Inspection".

- Attach the pawl (A) of the torque converter to the drive sprocket hole (B) on the transaxle assembly side.

CAUTION:
- **Rotate the torque converter for installing torque converter.**
- **Never damage the bushing inside the torque converter sleeve when installing the converter housing oil seal.**
- **Never reuse converter housing oil seal.**
- **Apply CVT fluid to converter housing oil seal.**

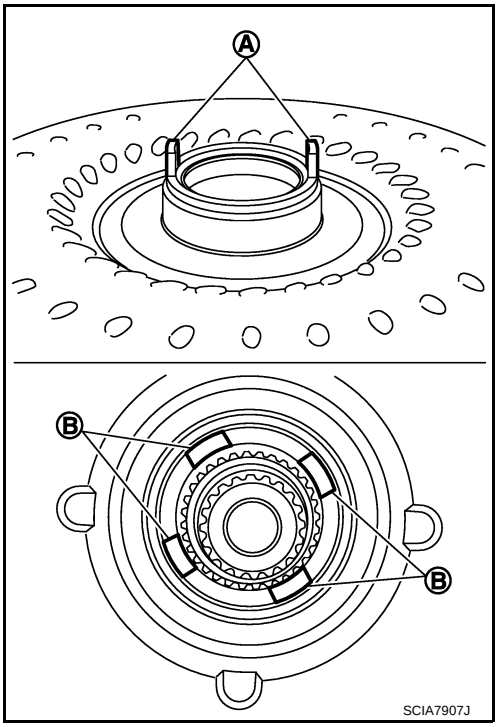

Inspection

INFOID:0000000003806560

INSPECTION AFTER INSTALLATION

- After inserting a torque converter to the CVT, check distance (A) within the reference value limit.

B : Scale
C : Straightedge

Distance A : Refer to TM-338, "Torque Converter".

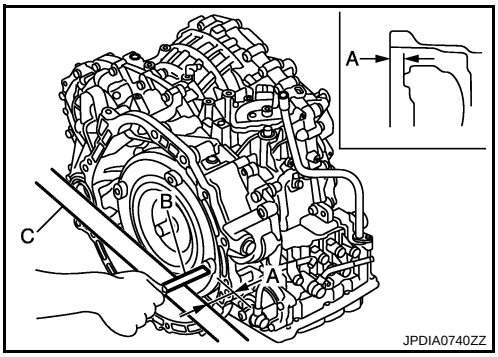

SERVICE DATA AND SPECIFICATIONS (SDS)

SERVICE DATA AND SPECIFICATIONS (SDS)

General Specification

INFOID:0000000003806561

Applied model		VQ25DE
CVT model		RE0F10A
CVT assembly	Model code number	1XF8E
Transmission gear ratio	D range	2.349 – 0.394
	Reverse	1.750
	Final drive	6.120
Recommended fluid		NISSAN CVT Fluid NS-2*
Fluid capacity		8.3 liter (7-1/4 Imp qt)

CAUTION:
- **Use only Genuine NISSAN CVT Fluid NS-2. Never mix with other fluid.**
- **Using CVT fluid other than Genuine NISSAN CVT Fluid NS-2 will deteriorate in driveability and CVT durability, and may damage the CVT, which is not covered by the warranty.**

*: Refer to MA-11, "Fluids and Lubricants".

Vehicle Speed When Shifting Gears

INFOID:0000000003806562

Numerical value data are reference values.

(rpm)

Throttle position	Shift pattern	Engine speed	
		At 40 km/h (25 MPH)	At 60 km/h (37 MPH)
8/8	“D” position	3,500 – 4,400	4,700 – 5,600
	Sport mode	3,500 – 4,400	4,700 – 5,600
	“L” position	3,500 – 4,400	4,700 – 5,600
2/8	“D” position	1,300 – 3,100	1,400 – 3,400
	Sport mode	2,200 – 3,000	2,800 – 3,600
	“L” position	3,300 – 4,200	4,200 – 5,000

CAUTION:

Lock-up clutch is engaged when vehicle speed is approximately 18 km/h (11 MPH) to 90 km/h (56 MPH).

Stall Speed

INFOID:0000000003806563

Stall speed	2,500 – 2,970 rpm

Line Pressure

INFOID:0000000003806564

kPa (bar, kg/cm^2, psi)

Engine speed	Line pressure
	“R”, “D” positions
At idle	750 (7.50, 7.65, 108.8)
At stall	5,700 (57.00, 58.14, 826.5)*

*: Reference values

Solenoid Valves

INFOID:0000000003806565

Name	Resistance (Approx.)
Pressure control solenoid valve B (secondary pressure solenoid valve)	3.0 – 9.0 Ω
Pressure control solenoid valve A (line pressure solenoid valve)	
Torque converter clutch solenoid valve	
Lock-up select solenoid valve	17.0 – 38.0 Ω

CVT Fluid Temperature Sensor

INFOID:0000000003806566

Name	Condition	CONSULT-III “Data Monitor” (Approx.)	Resistance (Approx.)
CVT fluid temperature sensor	20°C (68°F)	2.0 V	6.5 kΩ
	80°C (176°F)	1.0 V	0.9 kΩ

Primary Speed Sensor

INFOID:0000000003806567

Name	Condition	Data (Approx.)
Primary speed sensor	When driving [“L” position, 20 km/h (12 MPH)]	950 Hz

Secondary Speed Sensor

INFOID:0000000003806568

Name	Condition	Data (Approx.)
Secondary speed sensor	When driving [“D” position, 20 km/h (12 MPH)]	490 Hz

Step Motor

INFOID:0000000003900491

Name	Resistance (Approx.)
Step motor A	15.0 Ω
Step motor B	15.0 Ω
Step motor C	15.0 Ω
Step motor D	15.0 Ω

Torque Converter

INFOID:0000000003806569

Distance between end of converter housing and torque converter	14.4 mm (0.567 in)